Improvement Plans For Cedar Extension Redevelopment - Phase I

The City Of Cleveland, County Of Cuyahoga And State Of Ohio

Index to Drawings

Title Page	1.1
Existing Conditions	2.1
Site Plan	3.1
Utility Plan	4.1
Storm Drainage Plan	4.2
Electric Plan	4.3
Grading Plan	5.1
Notes & Details	6.1 To 6.3
SWPPP and Notes & Details	7.1 To 7.6

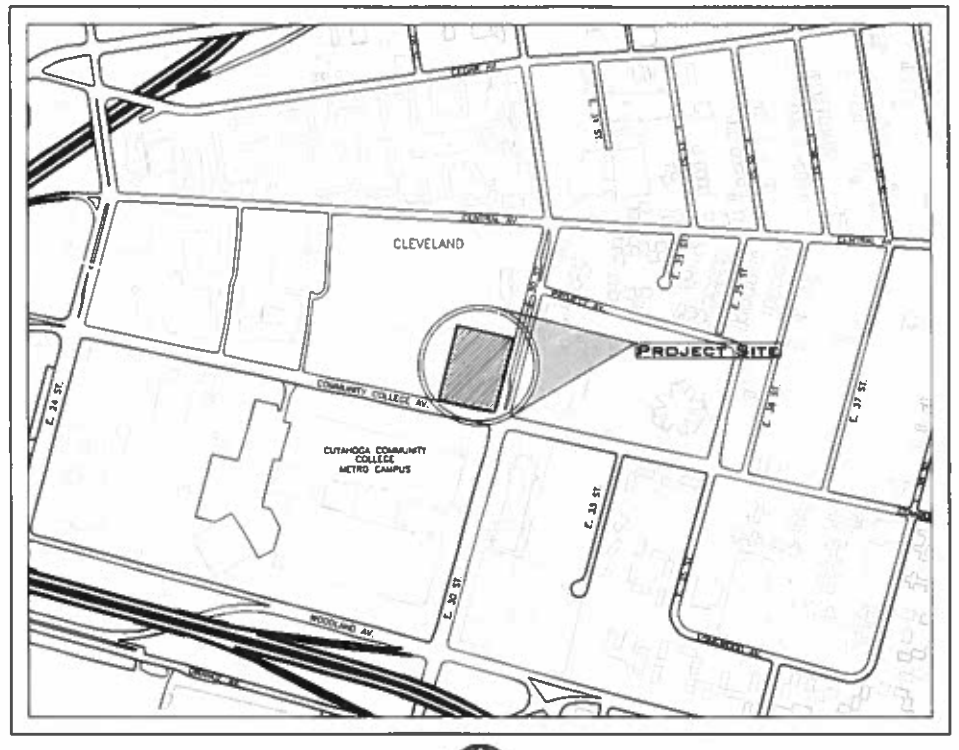

Vicinity Map

Scale: 1" = 400'

PROJECT DATA:

SITE DATA: THE PROJECT IS LOCATED ON THE NORTHWEST CORNER OF EAST 30TH STREET AND COMMUNITY COLLEGE AVENUE IN THE CITY OF CLEVELAND. THE PARCEL IS 87,085 S.F OR 1.9992 ACRES. THERE ARE NO SURFACE WATERS OF THE STATE WITHIN 200' OF THE SITE.

PRIOR LAND USE: THE SITE WAS PREVIOUS PART OF THE CMHA CEDAR EXTENSION DEVELOPMENT AND WAS DEVELOPED WITH APARTMENTS, PAVED PARKING LOTS AND PAVED WALKS. THE SITE WAS CLEARED IN 2013 IS CURRENTLY A VACANT LOT.

SOILS: THE SOIL SURVEY OF CUYAHOGA COUNTY IDENTIFIES THE SOILS ON SITE AS BEING URBAN LAND (UEA) URBAN LAND, ELNORA COMPLEX AND IS CLASSIFIED AS A HYDROLOGIC GROUP B SOIL. DEMOLITION WORK DONE ON SITE CONFIRM THAT SANDY SOILS WITH HIGH INFILTRATION RATES ARE PRESENT ON SITE. THE SOIL SURVEY OF CUYAHOGA COUNTY INDICATE SOILS IN THE GROUP HAVE PERMEABILITY RATES BETWEEN 6.0 AND 20.0 INCHES PER HOUR.

CONSTRUCTION ACTIVITY: CONSTRUCTION ACTIVITY WILL INCLUDE THE CONSTRUCTION OF A NEW APARTMENT BUILDING, PARKING LOT, DRIVE WAYS, NEW UTILITIES AND A STORM SEWER SYSTEM DESIGNED TO MEET LEED AND GREEN COMMUNITY REQUIREMENTS. CONSTRUCTION ACTIVITIES WILL PROCEED IN ACCORDANCE WITH THE CITY OF CLEVELAND CODIFIED ORDINANCES AND THE OHIO EPA CONSTRUCTION GENERAL PERMIT #OHC000004.

EXISTING STORM WATER: STORM WATER FROM THE SITE WAS PREVIOUSLY COLLECTED BY STORM SEWERS AND DISCHARGED TO COMBINATIONS SEWERS WITHIN THE RIGHT-OF-WAY WITHOUT DETENTION OR TREATMENT. WATER WAS TREATED BY THE NORTHEAST OHIO REGIONAL SEWER DISTRICT'S SOUTHERLY WASTEWATER TREATMENT PLANT.

FUTURE STORM WATER: STORM WATER FROM THE POST DEVELOPED SITE WILL BE COLLECTED BY STORM SEWERS AND DISCHARGED TO A UNDERGROUND DETENTION SYSTEM THAT WILL FORCE WATER INFILTRATION THEREFORE REDUCING THE DISCHARGE VOLUME AND REDUCING PEAK DISCHARGE RATES. STORM WATER DISCHARGED FROM THE SYSTEM IS DIRECTED TO A COMBINATION SEWER IN EAST 30TH STREET.

NOTICE OF INTENT (NOI) & NOTICE OF TERMINATION (NOT)
STORM WATER FROM THIS SITE IS DIRECTED TO A COMBINATION SEWER SYSTEM, THEREFORE FILING A NOI AND NOT WITH THE OHIO EPA IS NOT REQUIRED. THE DISTURBED AREA EXCEEDS THE THRESHOLD OF 1 ACRE AND THEREFORE THE CONTRACTOR IS STILL RESPONSIBLE TO MEET THE REQUIREMENTS OF THE NOI.

CONSTRUCTION:
START: SUMMER 2015 - COMPLETION: TBD

SWPPP CHANGES & AMENDMENTS: ALL CHANGES AND AMENDMENTS TO THE STORM WATER POLLUTION PREVENTION PLAN (SWPPP) SHALL BE APPROVED BY DAVID A. PIETRANTONE P.E., THE RIVERSTONE COMPANY.

PREPARED FOR & OWNER:
RALPH A FALBO INC / CEDAR REDEVELOPMENT PHASE I
429 4TH AVENUE
PITTSBURGH, PA 15219
PHONE: (412) 355-0300

CONTRACTOR:
HISTICK CONSTRUCTION
1300 BRIGHTON ROAD
PITTSBURGH, PA 15233
PHONE: (412) 322-1121

CONTACT: _____

STATE OF OHIO
DAVID A. PIETRANTONE
E-61756
REGISTERED
PROFESSIONAL ENGINEER

DAVID PIETRANTONE P.E. #61756

11-9-2015
DATE

STATE OF OHIO
DAVID A. PIETRANTONE
E-61756
REGISTERED
PROFESSIONAL ENGINEER

CEDAR EXTENSION
REDEVELOPMENT PHASE I

CUYAHOGA METROPOLITAN HOUSING AUTHORITY

EAST 30TH STREET

CLEVELAND, OHIO

Issue:

02.11.2015 - 90% REVIEW SET	
02.24.2015 - 90% FOR PERMIT	
03.24.2015 - FOR PERMIT	
04.07.2015 - FOR FINAL PRICING	
06.30.2015 - CITY COMMENTS	
07.30.2015 - CSWCD & NEORSD	
	COMMENTS
09.15.2015 - ADDENDUM #1	
11.09.2015 - CSWCD & NEORSD	
	COMMENTS

TITLE PAGE

RIVERSTONE
LAND SURVEYING · ENGINEERING · DESIGN
3615 EUCLID AVENUE · SUITE 310
CLEVELAND · OHIO · 44115
PHONE: (216) 431-1900 · FAX: (216) 431-1906
WWW.RIVERSTONEGROUP.COM

cityarchitecture
3636 Euclid Avenue
Suite 300 Cleveland,
Ohio 44115
phone.216.881.2444
fax.216.881.5713
www.cityarch.com

Project No.
02913
Riverstone Project: 13-286

Sheet Number:

C 1.1

Copyright © 2015

48 HOURS BEFORE YOU DIG Call: 800-362-2764 OHIO UTILITIES PROTECTION SERVICE

©2013 The Riverstone Company N:\2013 JOBS\13-286\dwg\13-286 T&D.dwg 11/9/2015 2:35:36 PM EST

CATCH BASIN AND MANHOLE INFORMATION:

STORM MANHOLE #1
RIM 673.70
INV 12" W 669.43
INV 8" N 669.00
INV 12" S 668.22
INV 15" E 668.22

STORM MANHOLE #2
W/ 24" SUMP & TRAP
RIM 673.40
INV 15" S 669.40
INV 15" S 667.40
INV 15" NE 665.78

STORM MANHOLE #3
RIM 673.45
INV 12" E 669.68
INV 8" S 668.93
INV 12" N 668.28
INV 15" W 668.28

CATCH BASIN #4
W/24" SUMP & TRAP
RIM 673.10
GRADE 672.60
INV 6" N 669.60
INV 6" S 669.60

CATCH BASIN #5
W/24" SUMP & TRAP
RIM 673.00
GRADE 672.50
INV 6" N 669.50
INV 12" E 669.50

CATCH BASIN #6
W/24" SUMP & TRAP
RIM 672.85
GRADE 672.35
INV 6" N 669.35
INV 12" N 668.81
INV 12" SE 668.81

CATCH BASIN #7
W/24" SUMP & TRAP
RIM 672.35
GRADE 672.10
INV 6" N 669.10
INV 8" E 668.88
INV 12" S 668.88

CATCH BASIN #8
W/24" SUMP & TRAP
RIM 672.50
GRADE 672.25
INV 6" NE 669.25
INV 8" SW 669.25

CATCH BASIN #9
W/24" SUMP & TRAP
RIM 673.25
GRADE 672.75
INV 8" N 669.75
INV 8" E 670.60
INV 12" W 669.75

CATCH BASIN #10
W/24" SUMP & TRAP
RIM 673.00
GRADE 672.50
INV 8" SE 669.50
INV 8" N 669.50

YARD DRAIN #11
RIM 674.50
INV 671.00

YARD DRAIN #12
RIM 674.60
INV 8" E&W 671.18

YARD DRAIN #13
RIM 674.60
INV 8" E&W 671.50

YARD DRAIN #14
RIM 675.22
INV 8" S 672.16
INV 8" W 672.00

YARD DRAIN #15
RIM 674.60
INV 8" E&W 672.00

YARD DRAIN #16
RIM 674.60
INV 671.63

YARD DRAIN #17
RIM 674.50
INV 8" E,S&W 671.20

BIOINFILTRATION CELL PLAN ELEVATIONS:
(SEE DETAIL ON SHEET C8.3 FOR BIOINFILTRATION CELL TYPICAL SECTION)

	CELL #4	CELL #5	CELL #6	CELL #7	CELL #8	CELL #9	CELL #10
"A"	673.10	673.00	672.85	672.35	672.50	673.25	673.00
"B"	672.60	672.50	672.35	672.10	672.25	672.75	672.50
"C"	670.60	670.50	670.35	670.10	670.25	670.75	670.50
"D"	670.35	670.25	670.10	669.85	670.00	670.50	670.25
"E"	670.10	670.00	669.85	669.60	669.75	670.25	670.00
"F"	669.60	669.50	669.35	669.10	669.25	669.75	669.50
"G"	669.10	669.00	668.85	668.60	668.75	669.25	669.50

BIOINFILTRATION CELL PLAN ELEVATION LEGEND

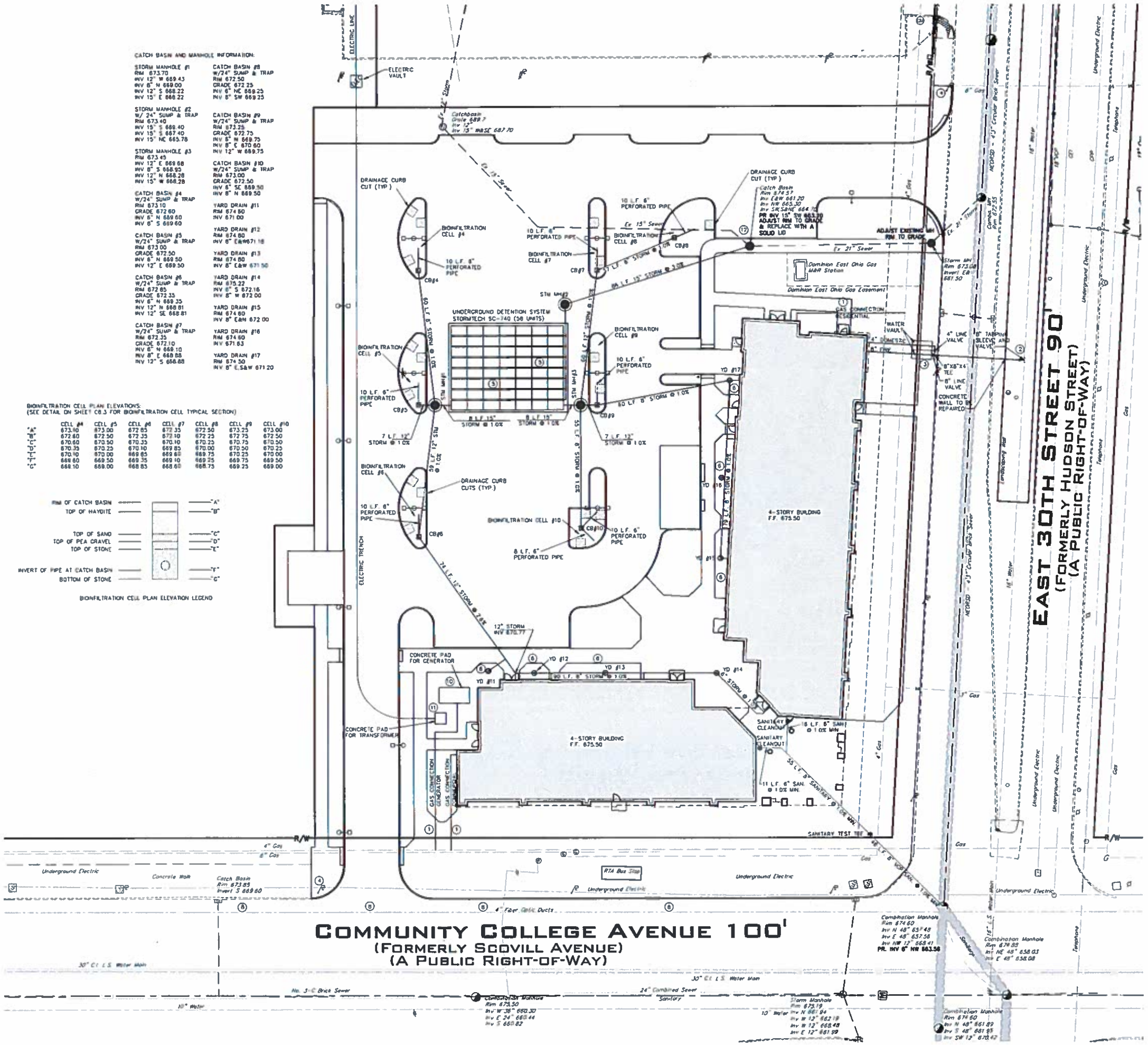

SEWER NOTES:

THE CONTRACTOR IS REQUIRED TO OBTAIN A SEWER PERMIT FROM THE DIVISION OF WATER POLLUTION CONTROL PRIOR TO ANY SEWER WORK.

NOTES:

1. GAS CONNECTION SIZE AND METER LOCATION TO BE DETERMINED BY DOMINION EAST OHIO GAS. CONTRACTOR TO COORDINATE WITH DOMINION EAST OHIO GAS PRIOR TO CONSTRUCTION.
2. 8" WATER CONNECTION: CONNECTION TO BE INSTALLED PER CWD STANDARD DETAIL STD – C11. 4" DOMESTIC LINE SHALL BE SPLIT FROM THE 8" FIRE LINE PER CWD STANDARD DETAIL STD-V04.
3. METER AND BACKFLOW DEVICES TO BE INSTALLED INSIDE THE VAULTS. CONTRACTOR SHALL PROVIDE AN APPROVED CLEVELAND WATER DEPARTMENT CONCRETE VAULT FOR THE DOMESTIC AND FIRE LINE. VAULT SHALL BE SIZED TO HOLD ALL METER AND BACKFLOW DEVICES AS SHOWN ON THE CWD STANDARD DETAIL STD-V04. SEE SHEET C8.3 FOR DETAILS.
4. UTILITY / LIGHT POLE RELOCATED. CONTRACTOR TO COORDINATE WITH UTILITY COMPANIES PRIOR TO CONSTRUCTION.
5. UNDERGROUND DETENTION SYSTEM: STORMTECH SC-740 SEE DETAILS ON SHEET C4.2.
6. YARD DRAIN TO BE INTO STORM SEWER USING 6" STORM SEWER @ 1.0% MINIMUM.
7. PROPOSED CURB INLETS SHALL BE INTO EXISTING CURB INLET WITH WATER TIGHT CONNECTION. CONTRACTOR SHALL REMOVE EXISTING GRATE AND INLET AND REPLACE WITH SOLID LID. CONTRACTOR SHALL ADJUST TO GRADE.
8. CONTRACTOR SHALL USE EXTREME CAUTION WHEN EXCAVATING NEAR THE FIBER-OPTIC DUCTS.
9. CONTRATOR SHALL FIELD VERIFY THE EXISTING INVERT AND SLOPE IN THE CURB INLET AND REPORT BACK TO THE DESIGN ENGINEER. PROPOSED CURB INLETS SHALL BE SLOPED TOWARD THE EXISTING CURB INLET AT A MINIMUM OF 1.0%.
10. GENERATOR CONCRETE PAD. SEE ARCHITECTURAL FOR DETAILS.
11. TRANSFORMER PAD PROVIDED BY CEI INSTALLED BY CONTRACTOR.
12. EXISTING CATCH BASIN. ADJUST RIM TO GRADE AND REPLACE GRATE WITH SOLID LID.

LEGEND

- Monument Box Found
- Iron Pin or Pipe Found
- 5/8" Iron Pin Set and Capped Riverstone Company Dudley PS5747
- P.K. Nail
- Gas Meter
- Gas Valve
- Utility Pole
- Light Pole
- Guy Anchor & Line
- Telephone Box
- Electric Box
- Cable Box
- Bollard
- Cleanout / Test Tee
- Spot Elevation Tag
- Hydrant
- Water Service Valve
- Water Valve
- Water Meter
- Reducer
- Storm Manhole
- Sanitary Manhole
- Curb Inlet
- Catch Basin
- Property Line
- Centerline

Ex. Parcel line
Original Sublot Line
Original Lot Line
Centerline
Property Line
Right-of-way Line
Easement Line
Railroad Tracks

	Existing	PROPOSED
Electric Line		
Gas Line		
Sanitary/Combination Sewer		
Storm Sewer		
Waterline		
Fence Line (Wooden)		
Fence Line (Chain-Link)		
Guardrail		

Ac.	Acres	Inv	Invert
Adj	Adjacent	L.C.A.	Limited Common Area
A.F.N.	Auditor's File Number	L.F.	Lineal Feet
Asp.	Asphalt	Meas./M	Measured
B.F	Basement Floor	MH	Manhole
BW	Bottom of Wall	Obs.	Observed
Calc./C.	Calculated	Pg	Page
CB	Catch Basin	P.P.N.	Permanent Parcel
C.C.M.R	Cuyahoga County Map Records		Number
		Prop	Proposed
C.L.F	Chain-link Fence	Rec./R	Record
Cr.	Cleare	R/W	Right-of-way
C.O	Clean Out	San.	Sanitary
Comb	Combination	S.F.	Square Feet
Conc.	Concrete	S/L	Sublot
Conn.	Connection	Stm.	Storm
D.H.	Drill Hole	T.B.M.	Temporary Bench Mark
D.I.W.M	Ductile Iron Water Main	TBR	To Be Removed
		T/C	Top of Curb
Elec	Electric	Tele	Telephone
Elev	Elevation	T.F	Top Of Footer
Encr	Encroaches	T.T	Test Tee
Ex.	Existing	TW	Top of Wall
F.F	Finished Floor	Typ.	Typical
OUT	Gutter	Vol.	Volume
		Wat	Water

GRAPHIC SCALE

20 0 10 20 30

(IN FEET)
1 inch = 20 ft.

48 HOURS BEFORE YOU DIG Call 1-800-362-2764 OHIO UTILITIES PROTECTION SERVICE

STATE OF OHIO
DAVID A. PIETRANTONE
E-61758
PROFESSIONAL ENGINEER

CEDAR EXTENSION REDEVELOPMENT PHASE I

CUYAHOGA METROPOLITAN HOUSING AUTHORITY

EAST 30TH STREET

CLEVELAND, OHIO

Issue
02.11.2015 - 90% REVIEW SET
02.24.2015 - 90% FOR PERMIT
03.24.2015 - FOR PERMIT
04.07.2015 - FOR FINAL PRICING
06.30.2015 - CITY COMMENTS
07.30.2015 - CSWCD & NEORSD COMMENTS
09.15.2015 - ADDENDUM #1
11.09.2015 - CSWCD & NEORSD COMMENTS

UTILITY PLAN

RIVERSTONE
LAND DEVELOPMENT SERVICES
88 W. BLACKSTONE AVENUE, SUITE 10
CLEVELAND, OHIO 44113
PHONE: (216) 481-8200 FAX: (216) 481-8600
WWW.RIVERSTONEGROUP.COM

cityarchitecture
3638 Euclid Avenue
Suite 300 Cleveland,
Ohio 44115
phone 216.881.2444
fax 216.881.8713
www.cityarch.com

Project No.
02913
Riverstone Project. 13-286

Sheet Number:

C 4.1

Copyright © 2015

©2014 THE RIVERSTONE COMPANY N: 2013 JOB\13-286\dwg\13-286.DWG 11/9/2015 3:10:21 PM EST

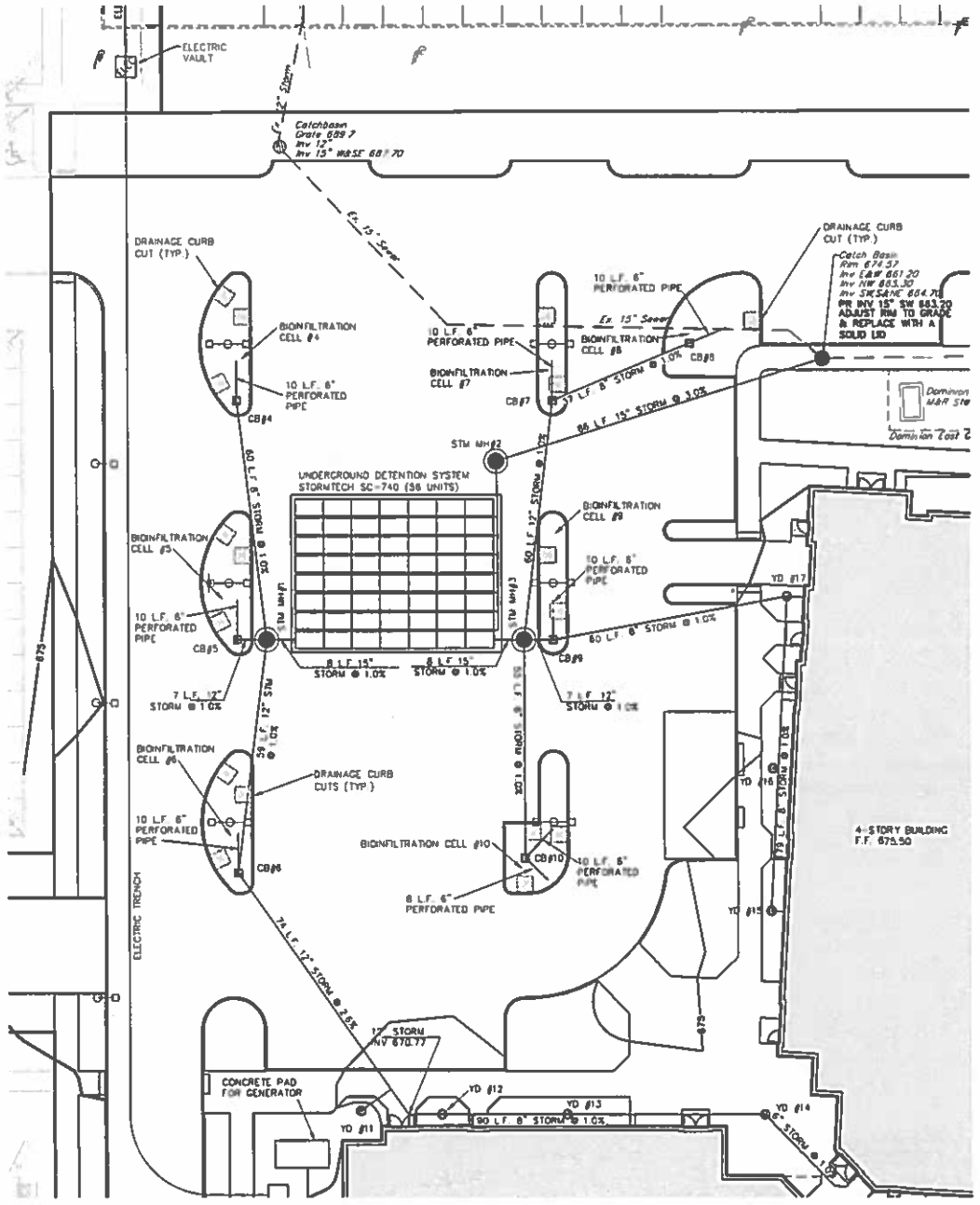

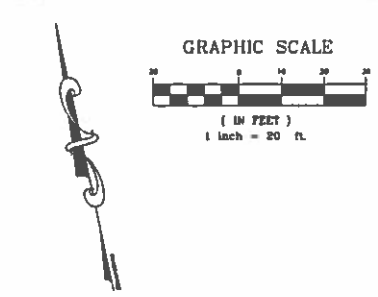

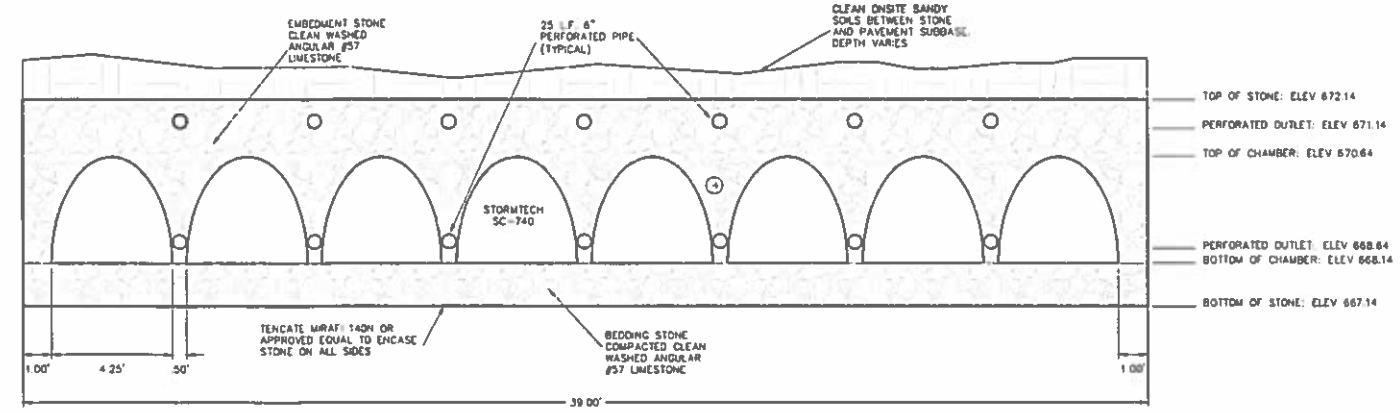

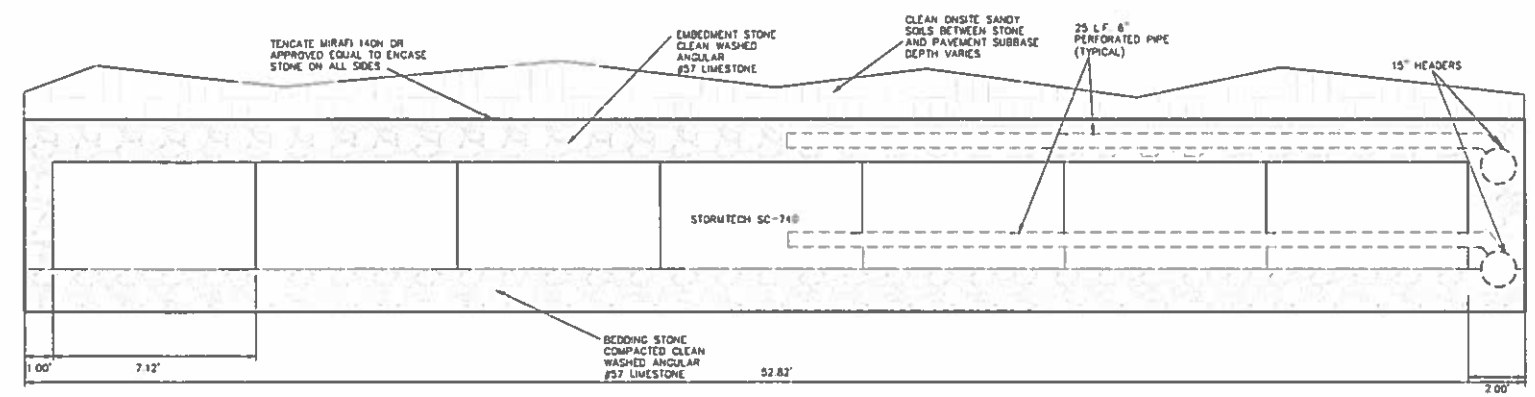

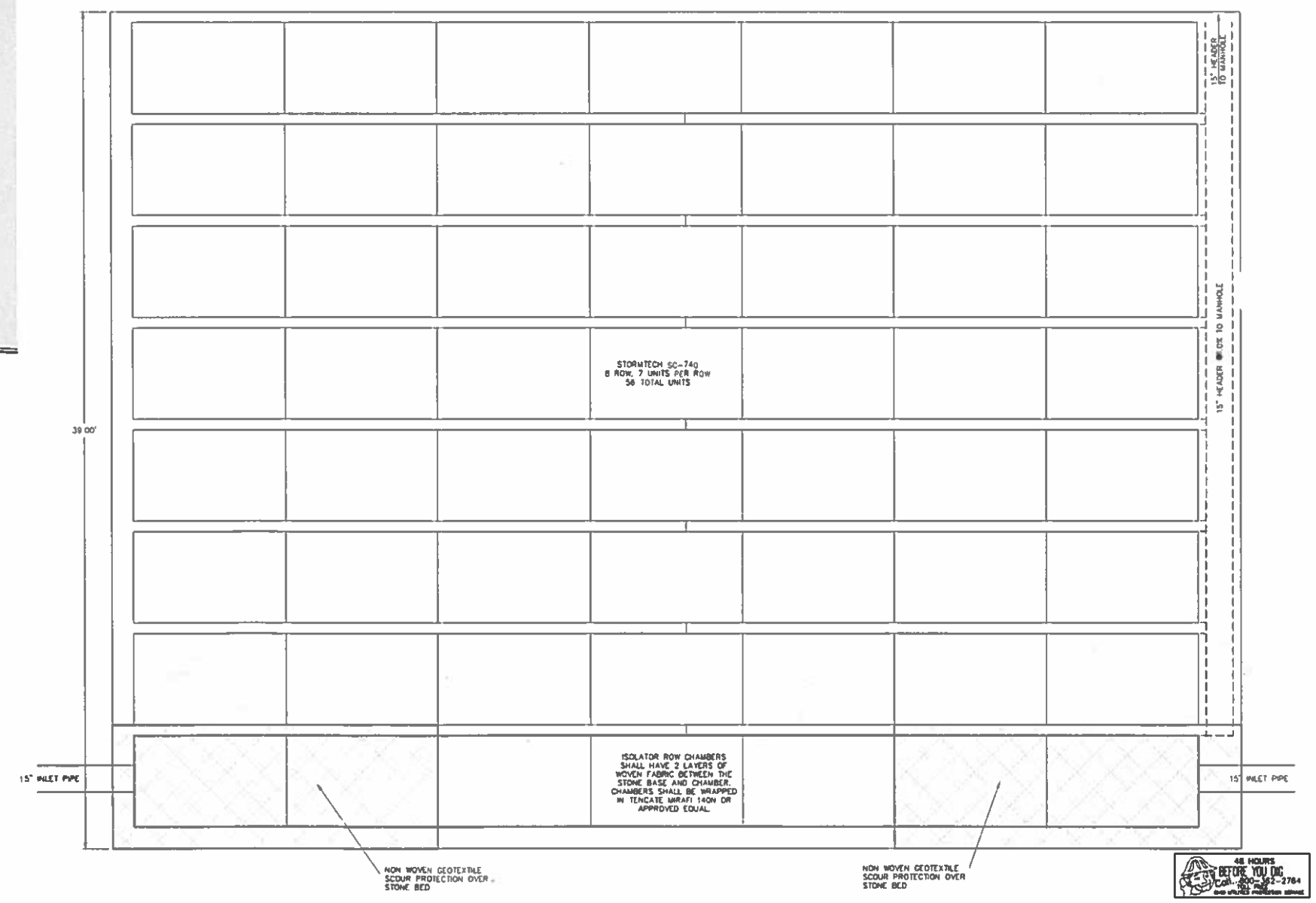

LONG TERM MAINTENANCE

THE STORMWATER MANAGEMENT SYSTEM WILL REQUIRE PERIODIC MAINTENANCE AND INSPECTION. THE SYSTEM IS DESIGNED WITH INSPECTION PORTS FOR THIS REASON. THE INSPECTION PORT SHALL BE INSTALLED ON THE ISOLATOR ROW OF THE SYSTEM, THIS IS WHERE THE INSPECTIONS AND MAINTENANCE WILL TAKE PLACE.

INSPECTION: A ROD SHALL BE INSERTED INTO THE INSPECTION PORT AND EXTENDED DOWN TO THE BASE OF THE SYSTEM TO MEASURE THE AMOUNT OF SEDIMENT ACCUMULATED IN THE ISOLATOR ROW. WHEN THE AVERAGE DEPTH OF THE SEDIMENT EXCEEDS 3" CLEANOUT WILL BE REQUIRED. THE ISOLATOR ROW SHOULD INITIALLY BE INSPECTED IMMEDIATELY AFTER COMPLETION OF THE SITE CONSTRUCTION. THIS IS THE TIME WHERE EXCESS AMOUNTS OF SEDIMENT CAN ENTER INTO THE SYSTEM. INSPECTION AND MAINTENANCE IF NECESSARY SHOULD BE PERFORMED PRIOR TO THE OWNER ACCEPTING THE SYSTEM. ONCE IN NORMAL SERVICE THE SYSTEM SHOULD BE INSPECTED TWICE A YEAR, UNTIL AN UNDERSTANDING OF THE SITES CHARACTERISTICS IS DEVELOPED. THE INSPECTION SCHEDULE CAN THEN BE REVISED TO FIT THE SITES NEEDS.

JETVAC MAINTENANCE IS RECOMMENDED ONCE THE SEDIMENT IN THE ISOLATOR ROW EXCEEDS 2". FIXED NOZZLES DESIGNED FOR LARGE CULVERTS OR SEWERS ARE PREFERRED. THE JETVAC PROCESS SHOULD ONLY BE PERFORMED ON THE ISOLATOR ROW AND IS NOT NECESSARY ON THE ENTIRE SYSTEM

©2014 The Riverstone Company N:\2013 JOBS\13-286-BWO\13-286.dwg 11/9/2015 2:10:21 PM EST

STATE OF OHIO
DAVID A. PIETRANTONE
E-61756
REGISTERED
PROFESSIONAL ENGINEER

CEDAR EXTENSION REDEVELOPMENT PHASE I

CUYAHOGA METROPOLITAN HOUSING AUTHORITY

EAST 30TH STREET

CLEVELAND, OHIO

Issue:

02.11.2015 - 90% REVIEW SET
02.24.2015 - 90% FOR PERMIT
03.24.2015 - FOR PERMIT
04.07.2015 - FOR FINAL PRICING
06.30.2015 - CITY COMMENTS
07.30.2015 - CSWCD & NEORSD COMMENTS
09.15.2015 - ADDENDUM #1
11.09.2015 - CSWCD & NEORSD COMMENTS

STORM DRAINAGE PLAN

RIVERSTONE
LAND SURVEYING • ENGINEERING • DESIGN
8910 SUPERIOR AVENUE | SUITE 110
CLEVELAND • OHIO • 44114
PHONE: (216) 901-0888 FAX: (216) 901-0889
WWW.RIVERSTONESURVEY.COM

cityarchitecture
3636 Euclid Avenue
Suite 300 Cleveland,
Ohio 44115
phone:216.881.2444
fax:216.881.8713
www.citysrch.com

Project No.
02913
Riverstone Project: 13-286

Sheet Number:

C 4.2

Copyright © 2015

48 HOURS BEFORE YOU DIG CALL 800-362-2764 OHIO PUCO UTILITY PROTECTION SERVICE

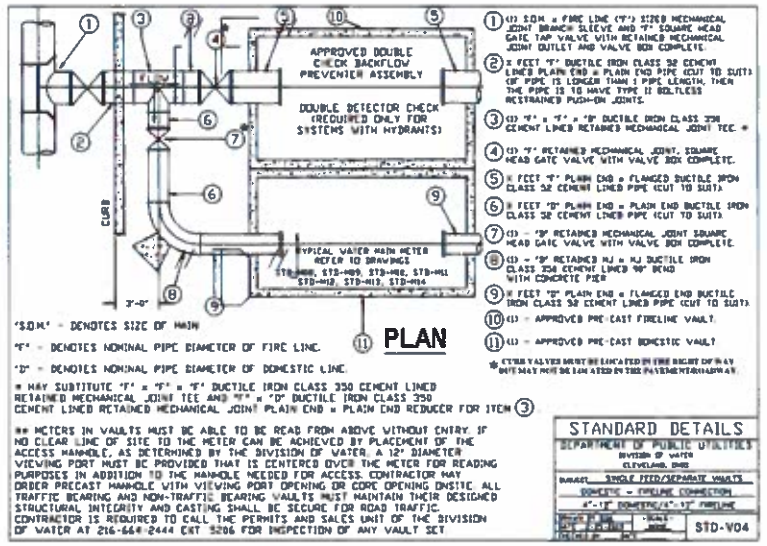

(1) S.D.M. x FIRE LINE ('F') SIZED MECHANICAL JOINT BRANCH SLEEVE AND 'F' SQUARE HEAD GATE TAP VALVE WITH RETAINED MECHANICAL JOINT OUTLET AND VALVE BOX COMPLETE.

(2) X FEET 'F' DUCTILE IRON CLASS 350 CEMENT LINED PLAIN END x PLAIN END PIPE (CUT TO SUIT) (IF PIPE IS LONGER THAN 1 PIPE LENGTH, THEN THE PIPE IS TO HAVE TYPE II BOLTLESS RESTRAINED PUSH-ON JOINTS.

(3) 'F' x 'F' x 'F' DUCTILE IRON CLASS 350 CEMENT LINED RETAINED MECHANICAL JOINT TEE *

(4) (1) 'F' RETAINED MECHANICAL JOINT, SQUARE HEAD GATE VALVE WITH VALVE BOX COMPLETE.

(5) X FEET 'F' PLAIN END x FLANGED DUCTILE IRON CLASS 350 CEMENT LINED PIPE (CUT TO SUIT)

(6) X FEET 'D' PLAIN END x PLAIN END DUCTILE IRON CLASS 350 CEMENT LINED PIPE (CUT TO SUIT)

(7) (1) - 'D' RETAINED MECHANICAL JOINT SQUARE HEAD GATE VALVE WITH VALVE BOX COMPLETE.

(8) (1) - 'D' RETAINED MJ x MJ DUCTILE IRON CLASS 350 CEMENT LINED 90° BEND WITH CONCRETE PIER

(9) X FEET 'D' PLAIN END x FLANGED END DUCTILE IRON CLASS 350 CEMENT LINED PIPE (CUT TO SUIT)

(10) (1) - APPROVED PRE-CAST FIRELINE VAULT.

(11) (1) - APPROVED PRE-CAST DOMESTIC VAULT.

* OTHER VALVES MUST BE LOCATED IN FIRE RIGHT OF WAY BUT MAY NOT BE LOCATED IN THE PAVEMENT/SIDEWALK.

PLAN

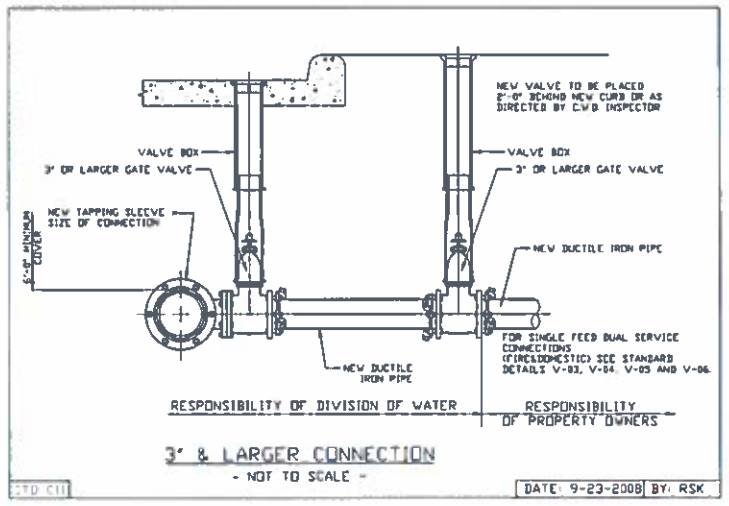

3" & LARGER CONNECTION

- NOT TO SCALE -

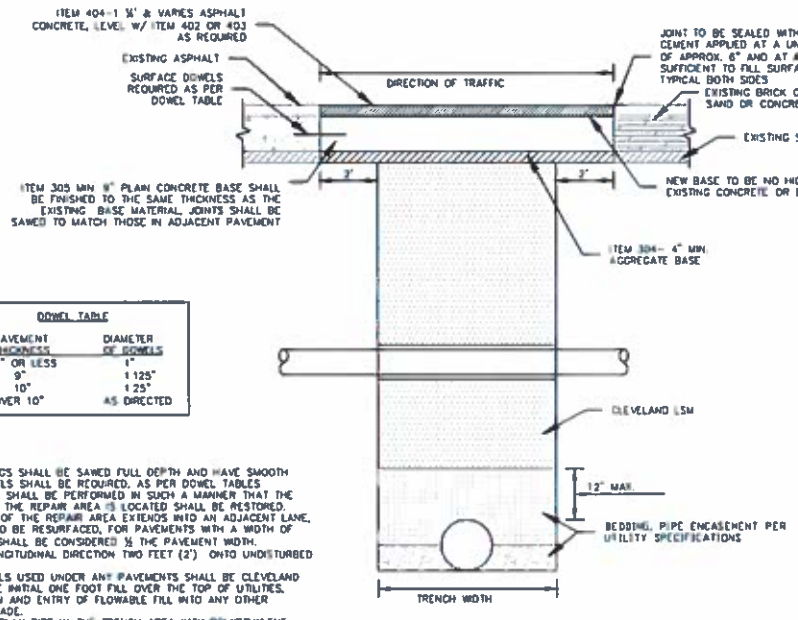

DOWEL TABLE	
PAVEMENT THICKNESS	DIAMETER OF DOWELS
8" OR LESS	1"
9"	1 125"
10"	1 25"
OVER 10"	AS DIRECTED

NOTES:

1. ALL PAVEMENT OPENINGS SHALL BE SAWED FULL DEPTH AND HAVE SMOOTH VERTICAL FACES. DOWELS SHALL BE REQUIRED, AS PER DOWEL TABLES
2. ASPHALT RESURFACING SHALL BE PERFORMED IN SUCH A MANNER THAT THE ENTIRE LANE IN WHICH THE REPAIR AREA IS LOCATED SHALL BE RESTORED. SHOULD ANY PORTION OF THE REPAIR AREA EXTENDS INTO AN ADJACENT LANE, THAT LANE SHALL ALSO BE RESURFACED. FOR PAVEMENTS WITH A WIDTH OF 40' OR LESS A LANE SHALL BE CONSIDERED ½ THE PAVEMENT WIDTH.
3. EXTEND OERCUT IN LONGITUDINAL DIRECTION TWO FEET (2') ONTO UNDISTURBED SUBGRADE.
4. ALL BACKFILL MATERIALS USED UNDER ANY PAVEMENTS SHALL BE CLEVELAND LSM PLACED FROM THE INITIAL ONE FOOT FILL OVER THE TOP OF UTILITIES. TO PREVENT FLOTATION AND ENTRY OF FLOWABLE FILL INTO ANY OTHER AREAS. TO THE SUBGRADE.
5. COVER ALL JOINTS IN CLAY PIPE IN THE TRENCH AREA WITH POLYETHYLENE MATERIAL BEFORE POURING FLOWABLE FILL. REPAIR TECHNIQUES SHALL BE IN ACCORDANCE WITH THE UTILITY COMPANY'S STANDARD REPAIR PROCEDURES.

ASPHALT PAVEMENT REPAIR WITHIN THE RIGHT-OF-WAY

NTS

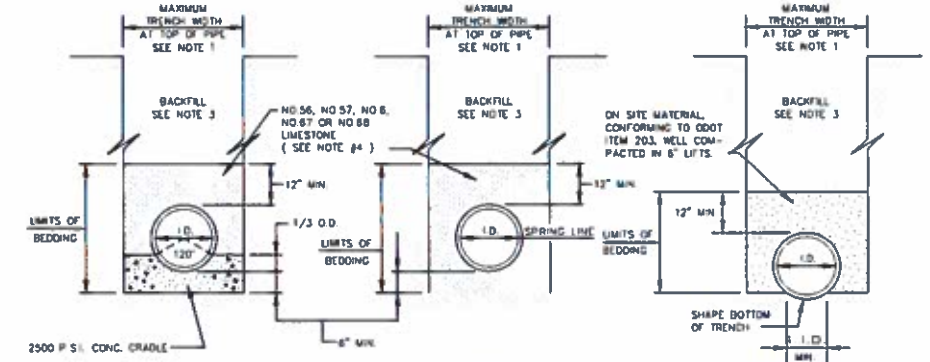

CLASS 'A' CLASS 'B' CLASS 'C'

NOTES:

1. MAXIMUM TRENCH AT TOP OF PIPE SHALL BE O.D.+24" FOR ALL PIPES UP TO AND INCLUDING 24" I.D.; O.D.+30" FOR PIPE LARGER THAN 24" I.D. TO 54" I.D.; AND O.D.+48" FOR PIPE SIZES 60" AND OVER.
2. ALL TRENCH EXCAVATION SHALL CONFORM TO THE RULES AND REGULATIONS OF THE OHIO STATE INDUSTRIAL COMMISSION (OSIC) AND THE FEDERAL OCCUPATIONAL SAFETY AND HEALTH ACT (OSHA).
3. ALL BACKFILL MATERIAL USED UNDER ANY PAVEMENTS WITH IN R/W SHALL BE CLEVELAND LSM OUTSIDE OF R/W SHALL BE PREMIUM BACKFILL PLACED FROM THE INITIAL ONE FOOT OVER THE TOP OF UTILITIES. TO PREVENT FLOTATION AND ENTRY OF FLOWABLE FILL INTO ANY OTHER AREAS. TO THE SUBGRADE. ALL OTHER AREAS SHALL BE BACKFILLED WITH SUITABLE MATERIAL AND SHALL BE TAMPED WITH MACHINE MOUNTED TAMPING EQUIPMENT. BACKFILL SHALL BE COMPACTED TO 100% OF MAXIMUM LABORATORY DRY DENSITY PER ASTM D 698.
4. ALL BEDDING SHALL BE CLASS 'B' EXCEPT AS STATED IN NOTE 6 OR OTHERWISE NOTED ON THE PLANS. BEDDING LIMITS FOR R.C.P. AND D.I.P. SHALL BE TO THE PIPE SPRINGLINE.
5. SLAG BEDDING SHALL NOT BE USED.
6. BEDDING FOR DUCTILE IRON PIPE USED FOR WATERLINE OR FORCE MAIN SHALL BE CLASS 'C' EXCEPT WHEN INSTALLED IN ROCK AND UNDER PAVEMENT OR STRUCTURES, IN WHICH CASE, BEDDING SHALL BE CLASS 'B' OR AS NOTED ON THE PLANS.

CLEVELAND TRENCH & BEDDING DETAILS

N.T.S.

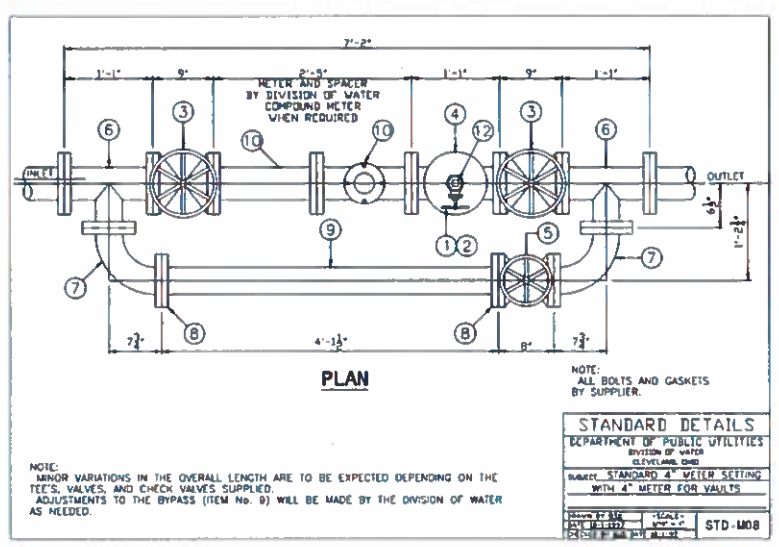

PLAN

NOTE:
MINOR VARIATIONS IN THE OVERALL LENGTH ARE TO BE EXPECTED DEPENDING ON THE TEE'S, VALVES, AND CHECK VALVES SUPPLIED.
ADJUSTMENTS TO THE BYPASS (ITEM No. 8) WILL BE MADE BY THE DIVISION OF WATER AS NEEDED.

MATERIALS REQUIRED FOR INSTALLATION

STANDARD 4" METER SETTING WITH 4" METER

ITEM	REQ'D	SIZE	DESCRIPTION
1	1	2"	HAND WHEEL GATE VALVE, SCREWED
2	1	2" x 10"	BRASS NIPPLE
3	2	4"	HAND WHEEL GATE VALVES, FLANGED
4	1	4"	SWING CHECK VALVE, FLANGED
5	1	3"	O.S.Y. VALVE, FLANGED
6	2	4" x 3"	CAST IRON TEES, FLANGED
7	2	3"	CAST IRON ELBOWS, FLANGED
8	2	3" x 7-1/2"	CAST IRON FLANGE, 4 HOLE
9	5 FT	3"	GALVANIZED PIPE, EXTRA HEAVY
10	1	4"	TURBINE METER OR COMPOUND METER (METER & SPACER PROVIDED BY CWD)
11	1	2"	BRASS PLUG
12	8	4"	FLANGE GASKETS
13	5	3"	FLANGE GASKETS
14	64	5/8" x 3"	MACHINE BOLTS
15	20	5/8" x 2-1/2"	MACHINE BOLTS
16	6	5/8" x 3-1/2"	STUD BOLTS
17	90	5/8"	HEXNUTS

(SEE DRAWING No. STD M08 and STD-V01).
11-19-98

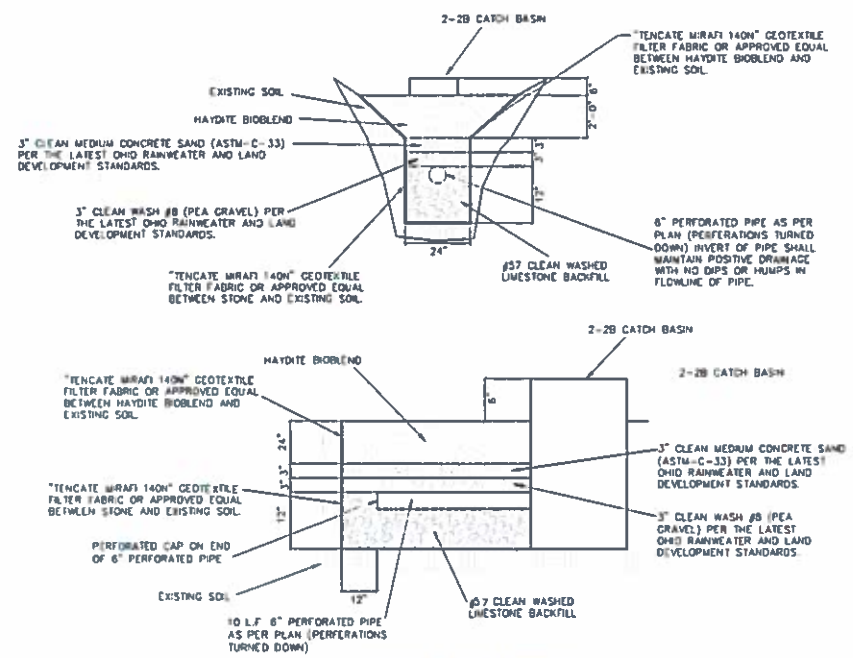

BIOINFILTRATION CELL PROFILE

NTS

HAYDITE BIOBLEND SOIL MIXTURE

PLANTING AND FILTRATION MEDIA
A. HAYDITE FINE (No. 4 x 0) EXPANDED SHALE: 92-97%
B. APPROVED ORGANIC MATTER: 3-8%

HAYDITE FINE (No. 4 x 0) EXPANDED SHALE
1. DRY, LOOSE UNIT WEIGHT PER ASTM C29: 50-70 LBS./CU.FT.
2. pH PER AASHTO T289: 5-8.5
3. SODIUM SULPHATE SOUNDNESS (% LOSS) PER AASHTO T104: <8%
4. CONSTANT HEAD PERMEABILITY PER ASTM D434: 8-30 IN./HR.
5. PARTICLE-SIZE DISTRIBUTION PER ASTM C330 (LISTED BELOW)

SIEVE SIZE	PASSING SPECIFICATION
3/8"	100
#4	85-100
#16	40-80
#50	10-35
#100	5-25

APPROVED ORGANIC MATTER
1. pH: 6-8
2. SOLUBLE SALTS < 10 mS/cm
3. CARBON TO NITROGEN RATIO ≤ 30:1
4. MOISTURE: 30-65%
5. FREE OF STONES: NO PARTICLES > 1/2 IN.

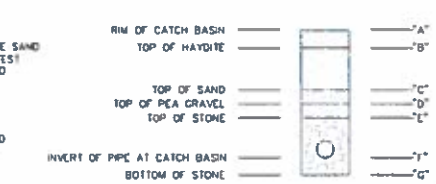

BIOINFILTRATION CELL PLAN ELEVATION LEGEND

BIOINFILTRATION CELL PLAN ELEVATIONS:

	CELL #4	CELL #5	CELL #6	CELL #7	CELL #8	CELL #9	CELL #10
"A"	673.10	673.00	672.85	672.35	672.50	673.25	673.00
"B"	672.60	672.50	672.35	672.10	672.25	672.75	672.50
"C"	670.60	670.50	670.35	670.10	670.25	670.75	670.50
"D"	670.35	670.25	670.10	669.85	670.00	670.50	670.25
"E"	670.10	670.00	669.85	669.60	669.75	670.25	670.00
"F"	669.60	669.50	669.35	669.10	669.25	669.75	669.50
"G"	669.10	669.00	668.85	668.60	668.75	669.25	669.00

STATE OF OHIO
DAVID A. PIETRANTONE
E-61758
REGISTERED
PROFESSIONAL ENGINEER

CEDAR EXTENSION REDEVELOPMENT PHASE I

CUYAHOGA METROPOLITAN HOUSING AUTHORITY

EAST 30TH STREET

CLEVELAND, OHIO

Issue.
02.11.2015 - 90% REVIEW SET
02.24.2015 - 80% FOR PERMIT
03.24.2015 - FOR PERMIT
04.07.2015 - FOR FINAL PRICING
06.30.2015 - CITY COMMENTS
07.30.2015 - CSWCD & NEORSD COMMENTS
09.15.2015 - ADDENDUM #1
11.09.2015 - CSWCD & NEORSD COMMENTS

DETAILS AND NOTES

RIVERSTONE
LAND SURVEYING - GEOMORPHOLOGY - DESIGN
3519 SUPERIOR AVENUE, SUITE 110
CLEVELAND, OHIO 44114
PHONE: 216.651.0000 FAX: 216.651.0240
www.riverstone.com

cityarchitecture
3836 Euclid Avenue
Suite 300 Cleveland,
Ohio 44115
phone.216.881.2444
fax.216.881.6713
www.cityarch.com

Project No.
02913
Riverstone Project. 13-286

Sheet Number:

C 6.3

Copyright © 2015

48 HOURS BEFORE YOU DIG CALL 800-362-2764

©2013 The Riverstone Company N 2013 JC#13-286 dwg 13-286 TBD dwg 11.9.2015 2:29:36 PM EST

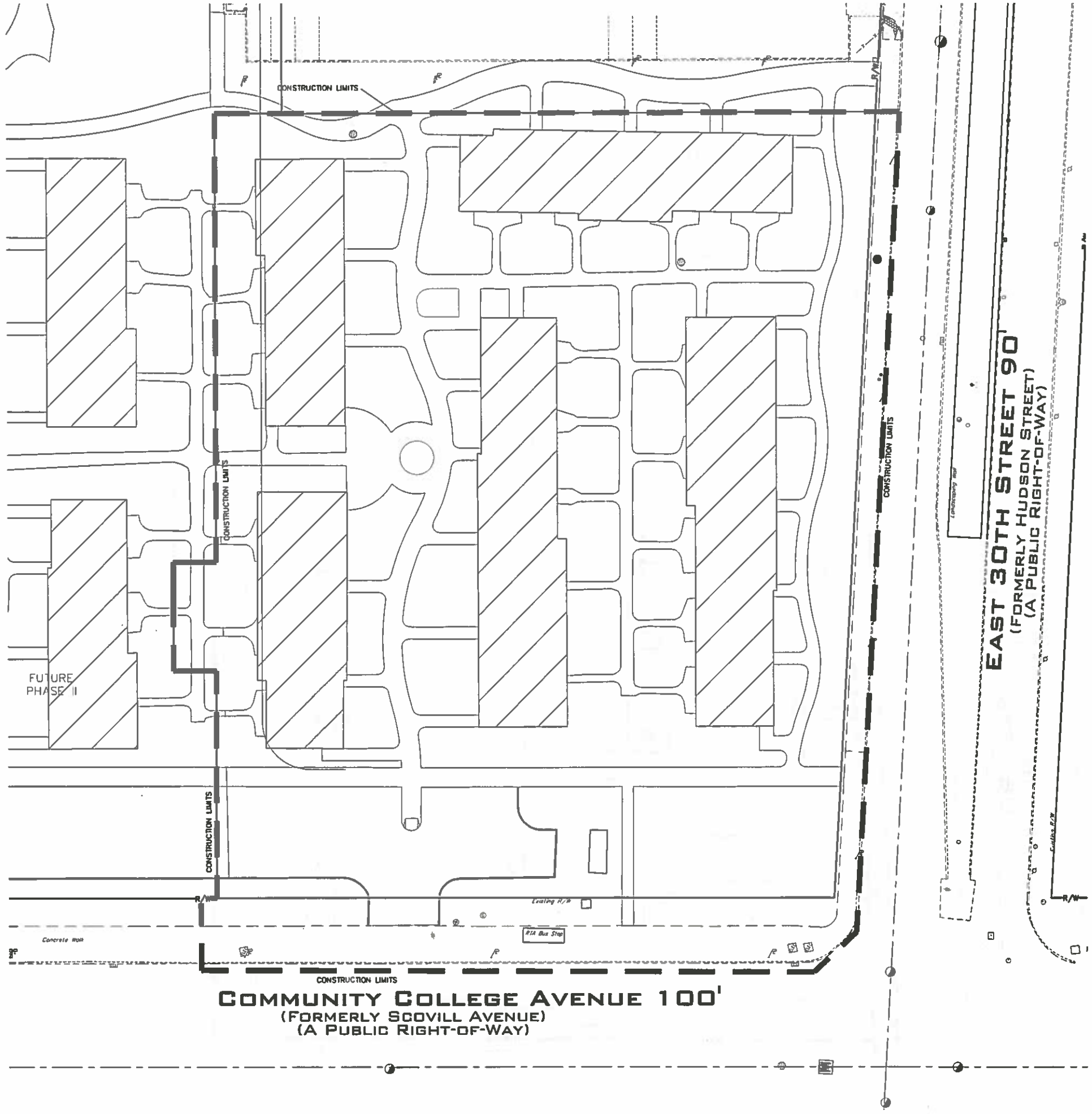

SWPPP NOTES:

REDEVELOPMENT PHASE I PARCEL AREA 87,085 S.F., 1.9992 ACRES
AREA WITHIN CONTRUCTION LIMITS 105,472 S.F., 2.4213 ACRES

SITE WAS PREVIOUSLY DEVELOPED WITH APARTMENT BUILDINGS, PARKING LOTS AND CONCRETE WALKS. SITE WAS DEMOLISHED AND CLEARED IN 2013. PREDEVELOPED WEIGHTED C VALUE IS BASED ON THE PREVIOUSLY DEVELOPED SITE

PRE DEVELOPED WEIGHTED C

SURFACE	AREA SF	AREA AC	C	AxC
BUILDING	24,055	0.5522	0.90	0.4969
PAVED	20,028	0.4598	0.90	0.4137
OPEN	43,004	0.9872	0.45	0.4442
TOTAL	87,085	1.9992		1.3548

WEIGHTED C = $\frac{1.3549}{1.9992}$ = 0.678 = 0.68

PERCENTAGE OF IMPERVIOUS AREA

TOTAL IMPERVIOUS AREA = 44,081 SF = 1.012 ACRES
TOTAL AREA = 87,085 SF = 1.9992 ACRES

$\frac{1.012 \text{ ACRES}}{1.9992 \text{ ACRES}}$ = 0.506 = 50.6%

EXISTING SITE IS MORE THAN 50% IMPERVIOUS

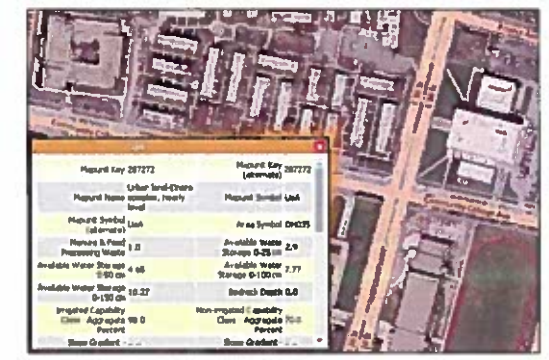

SOILS MAP FROM CUYAHOGA COUNTY GIS WEBSITE.
SOIL TYPE UeA – URBAN LAND ELNORA COMPLEX

STATE OF OHIO
DAVID A. PIETRANTONE
E-61756
REGISTERED
PROFESSIONAL ENGINEER

CEDAR EXTENSION REDEVELOPMENT PHASE I

CUYAHOGA METROPOLITAN HOUSING AUTHORITY

EAST 30TH STREET

CLEVELAND, OHIO

LEGEND

- Monument Box Found
- Iron Pin or Pipe Found
- 5/8" Iron Pin Set and Capped Riverstone Company Dudley PS8747
- P.K. Nail
- Gas Meter
- Gas Valve
- Utility Pole
- Light Pole
- Guy Anchor & Line
- Telephone Box
- Electric Box
- Cable Box
- Bollard
- Cleanout / Test Tee
- Spot Elevation Tag
- Hydrant
- Water Service Valve
- Water Valve
- Water Meter
- Reducer
- Storm Manhole
- Sanitary Manhole
- Curb Inlet
- Catch Basin
- Property Line
- Centerline

Es. Parcel line
Original Subdivi Line
Original Lot Line
Centerline
Property Line
Right-of-way Line
Easement Line
Railroad Tracks

	Existing	PROPOSED
Electric Line		
Gas Line		
Sanitary/Combination Sewer		
Storm Sewer		
Waterline		
Fence Line (Wooden)		
Fence Line (Chain-Link)		
Guardrail		

Ac.	Acres	Inv	Invert
Adj.	Adjacent	L.C.A.	Limited Common Area
A.F.N.	Auditor's File Number	L.F.	Linear Feet
Asp	Asphalt	Meas./M.	Measured
B.F.	Basement Floor	MH	Manhole
BW	Bottom of Wall	Obs.	Observed
Calc./C.	Calculated	Pg	Page
CB	Catch Basin	P.P.N.	Permanent Parcel Number
C.C.M.R	Cuyahoga County Map Records	Prop	Proposed
C.L.F.	Chain-link Fence	Rec./R.	Record
Cr.	Clears	R/W	Right-of-way
C.O.	Clean Out	San	Sanitary
Comb	Combination	S.F.	Square Feet
Conc	Concrete	S/L	Sublot
Conn.	Connection	Stm.	Storm
D.H.	Drill Hole	T.B.M.	Temporary Bench Mark
D.I.W.M.	Ductile Iron Water Main	TBR	To Be Removed
		T/C	Top of Curb
Elec	Electric	Tele	Telephone
Elev	Elevation	T.F.	Top Of Footer
Encr.	Encroaches	T.T	Test Tee
Ex.	Existing	TW	Top of Wall
F.F.	Finished Floor	Typ.	Typical
GUT	Gutter	Vol.	Volume
		Wat	Water

GRAPHIC SCALE

20 0 10 20 30

(IN FEET)
1 inch = 20 ft.

48 HOURS BEFORE YOU DIG
Call... 800-362-2764
Ohio Utilities Protection Service

Issue:

02.11.2015 - 90% REVIEW SET
02.24.2015 - 90% FOR PERMIT
03.24.2015 - FOR PERMIT
04.07.2015 - FOR FINAL PRICING
06.30.2015 - CITY COMMENTS
07.30.2015 - CSWCD & NEORSD COMMENTS
09.15.2015 - ADDENDUM #1
11.09.2015 - CSWCD & NEORSD COMMENTS

SWPPP HISTORICAL SITE CONDITIONS

RIVERSTONE
LAND SURVEYING • ENGINEERING • DESIGN
8811 Rockside Road, Suite 110
Valley View, Ohio 44125
PHONE: 216.524.1900 FAX: 216.524.1910
www.riverstone-group.com

cityarchitecture
3636 Euclid Avenue
Suite 300 Cleveland,
Ohio 44115
phone.216.881.2444
fax.216.881.6713
www.cityarch.com

Project No.
02913
Riverstone Project: 13-286

Sheet Number:
C7.1

Copyright © 2015

©2014 The Riverstone Company N:\2013 Jobs\13-286\dwg\13-286.dwg 11/9/2015 3:15:21 PM EST

SWPPP LEGEND

- PERIMETER CONTROL: SILT FENCE OR COMPOST FILLED FILTER SOCK
- CONSTRUCTION LIMITS
- INLET PROTECTION
- CONSTRUCTION ENTRANCE
- CONCRETE WASHOUT
- VEHICLE FUELING
- TEMPORARY STABILIZATION*
- PERMANENT STABILIZATION*

* SEEDING AREAS INDICATED ON PLAN ARE TENTATIVE ONLY. CONTRACTOR SHALL APPLY PERMANENT AND TEMPORARY SEEDING AS PER THE NOTES ON SHEET C7.3 THROUGHOUT THE PROJECT.

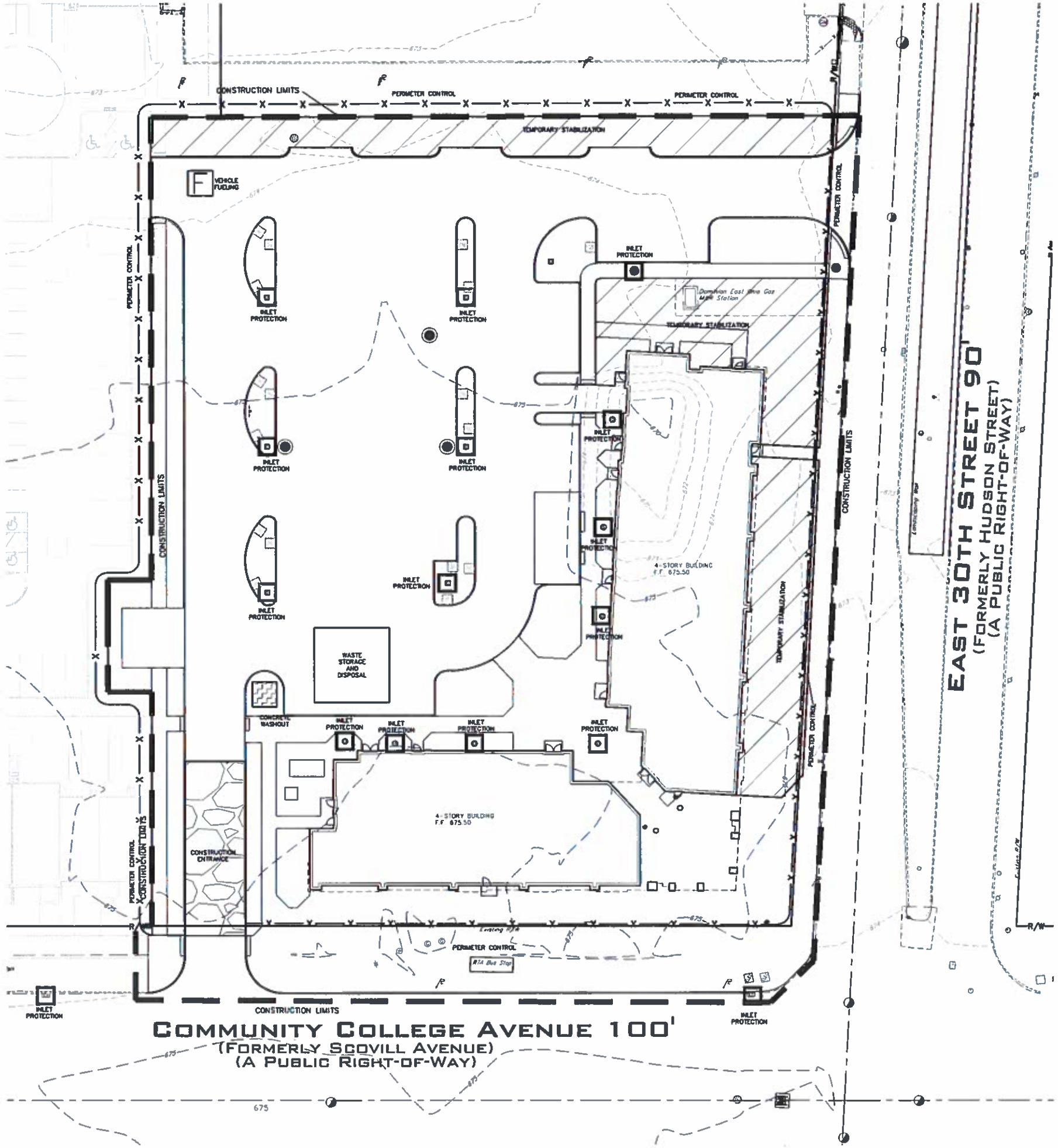

SWPPP NOTES.

CONSTRUCTION ACTIVITIES WILL PROCEED IN ACCORDANCE WITH THE CITY OF CLEVELAND CODIFIED ORDINANCES AND THE OHIO EPA CONSTRUCTION GENERAL PERMIT #OHCO00004.

REDEVELOPMENT PHASE I PROPERTY AREA 87,085 S.F., 1.9992 ACRES
AREA WITHIN CONTRUCTION LIMITS 105,472 S.F., 2.4213 ACRES

LOCATION OF WASTE STORAGE AND DISPOSAL SHOWN ON THE PLANS SHALL BE VERIFIED BY CONTRACTOR. LOCATION MAY BE CHANGED AND THE SWPPP AMENDED.

LOCATION OF VEHICLE FUELING SHOWN ON THE PLANS SHALL BE VERIFIED BY THE CONTRACTOR. LOCATION MAY BE CHANGED AND THE SWPPP AMENDED. CONTRACTOR TO COORDINATE WITH THE CITY OF CLEVELAND. VEHICLE FUELING AREA SHALL CONFORM WITH ALL OSHA, EPA AND FIRE DEPARTMENT REQUIREMENTS.

A COPY OF THE SWPPP AND ALL ADDENDUMS TO THE SWPPP SHALL BE KEPT ON SITE AT ALL TIMES.

ALL EROSION AND SEDIMENT CONTROL PRACTICES SHALL BE INSTALLED AS PER PLAN. ALL PRACTICES MUST BE MAINTAINED AND FUNCTIONAL DURING CONSTRUCTION ACTIVITIES.

EROSION CONTROL BLANKETS WITH MATTING SHALL BE USED ON SLOPES GREATER THEN 6%

ONCE THE SITE HAS BEEN STABILIZED AND PROPER AUTHORIZATION HAS BEEN OBTAINED, CONSTRUCTION BMPS MAY BE REMOVED.

CONSTRUCTION SCHEDULE

1. INSTALL TEMPORARY STONE CONSTRUCTION ENTRANCE.
2. INSTALL PERIMETER CONTROL.
3. CLEAR AND GRUB WITHIN CONSTRUCTION LIMITS.
4. STRIP TOPSOIL.
5. MASS GRADE.
6. INSTALL CEMENT TRUCK WASHOUT AREA.
7. INSTALL UTILITIES.
8. INSTALL BUILDING FOUNDATION.
9. INSTALL CURBS.
10. PAVE.
11. INSTALL BIOINFILTRATION CELLS
12. FINAL GRADE.
13. LANDSCAPE AND APPLY PERMANENT STABILIZATION AS NECESSARY.
14. AFTER PROPER AUTHORIZATION HAS BEEN OBTAINED FROM THE CITY ENGINEER, REMOVE EROSION AND/OR SEDIMENT BMP'S.

GRAPHIC SCALE

(IN FEET)
1 inch = 20 ft.

48 HOURS BEFORE YOU DIG Call: 800-362-2764 (Toll Free) (Non-Member Professional Service)

STATE OF OHIO DAVID A. PIETRANTONE E-61756 REGISTERED PROFESSIONAL ENGINEER

CEDAR EXTENSION REDEVELOPMENT PHASE I

CUYAHOGA METROPOLITAN HOUSING AUTHORITY

EAST 30TH STREET

CLEVELAND, OHIO

Issue:
02.11.2015 - 90% REVIEW SET
02.24.2015 - 90% FOR PERMIT
03.24.2015 - FOR PERMIT
04.07.2015 - FOR FINAL PRICING
06.30.2015 - CITY COMMENTS
07.30.2015 - CSWCD & NEORSD COMMENTS
09.18.2015 - ADDENDUM #1
11.09.2015 - CSWCD & NEORSD COMMENTS

SWPPP CONSTRUCTION

RIVERSTONE
LAND SURVEYING · ENGINEERING · DESIGN
2241 Superior Avenue, Suite 110
Cleveland, Ohio 44114
PHONE: (216) 621-2006 FAX: (216) 621-1966
WWW.RIVERSTONEPLANET.COM

cityarchitecture
3636 Euclid Avenue
Suite 300 Cleveland,
Ohio 44115
phone.216.881.2444
fax.216.881.6713
www.cityarch.com

Project No.
02913
Riverstone Project. 13-286

Sheet Number:
C7.2

Copyright © 2015

© 2014 The Riverstone Company N:\2013 JOBS\13-286\DWG\13-286.DWG 11/9/2015 9:10:31 AM EST

CATCH BASIN AND MANHOLE INFORMATION.

STORM MANHOLE #1
RIM 673.70
INV 12" W 669.43
INV 8" N 669.00
INV 12" S 668.22
INV 15" E 668.22

STORM MANHOLE #2
W/ 24" SUMP & TRAP
RIM 673.40
INV 15" S 669.40
INV 15" S 667.40
INV 15" NE 665.78

STORM MANHOLE #3
RIM 673.45
INV 12" E 669.68
INV 8" S 668.85
INV 12" N 668.28
INV 15" W 668.28

CATCH BASIN #4
W/24" SUMP & TRAP
RIM 673.10
GRADE 672.60
INV 8" N 669.60
INV 8" S 669.60

CATCH BASIN #5
W/24" SUMP & TRAP
RIM 673.00
GRADE 672.50
INV 8" N 668.50
INV 12" E 669.50

CATCH BASIN #6
W/24" SUMP & TRAP
RIM 672.85
GRADE 672.35
INV 6" N 669.35
INV 12" N 668.81
INV 12" SE 668.81

CATCH BASIN #7
W/24" SUMP & TRAP
RIM 672.35
GRADE 672.10
INV 8" N 669.10
INV 8" E 668.88
INV 12" S 668.88

CATCH BASIN #8
W/24" SUMP & TRAP
RIM 672.50
GRADE 672.25
INV 8" NE 669.25
INV 8" SW 669.25

CATCH BASIN #9
W/24" SUMP & TRAP
RIM 673.25
GRADE 672.75
INV 8" N 669.75
INV 8" E 670.60
INV 12" W 669.75

CATCH BASIN #10
W/24" SUMP & TRAP
RIM 673.00
GRADE 672.50
INV 6" SE 669.50
INV 8" N 669.50

YARD DRAIN #11
RIM 674.60
INV 671.00

YARD DRAIN #12
RIM 674.80
INV 8" E&W 671.18

YARD DRAIN #13
RIM 674.80
INV 8" E&W 671.50

YARD DRAIN #14
RIM 675.22
INV 8" S 672.16
INV 8" W 672.00

YARD DRAIN #15
RIM 674.60
INV 8" E&W 672.00

YARD DRAIN #16
RIM 674.60
INV 671.63

YARD DRAIN #17
RIM 674.50
INV 8" E.S&W 671.20

BIOINFILTRATION CELL PLAN ELEVATIONS.
(SEE DETAIL ON SHEET C8.3 FOR BIOINFILTRATION CELL TYPICAL SECTION)

	CELL #4	CELL #5	CELL #6	CELL #7	CELL #8	CELL #9	CELL #10
"A"	673.10	673.00	672.85	672.35	672.50	673.25	673.00
"B"	672.60	672.50	672.35	672.10	672.25	672.75	672.50
"C"	670.60	670.50	670.35	670.10	670.25	670.75	670.50
"D"	670.35	670.25	670.10	669.85	670.00	670.50	670.25
"E"	670.10	670.00	669.85	669.60	669.75	670.25	670.00
"F"	669.80	669.50	669.35	669.10	669.25	669.75	669.50
"G"	669.10	669.00	668.85	668.60	668.75	669.25	669.00

BIOINFILTRATION CELL PLAN ELEVATION LEGEND

FUTURE PHASE II

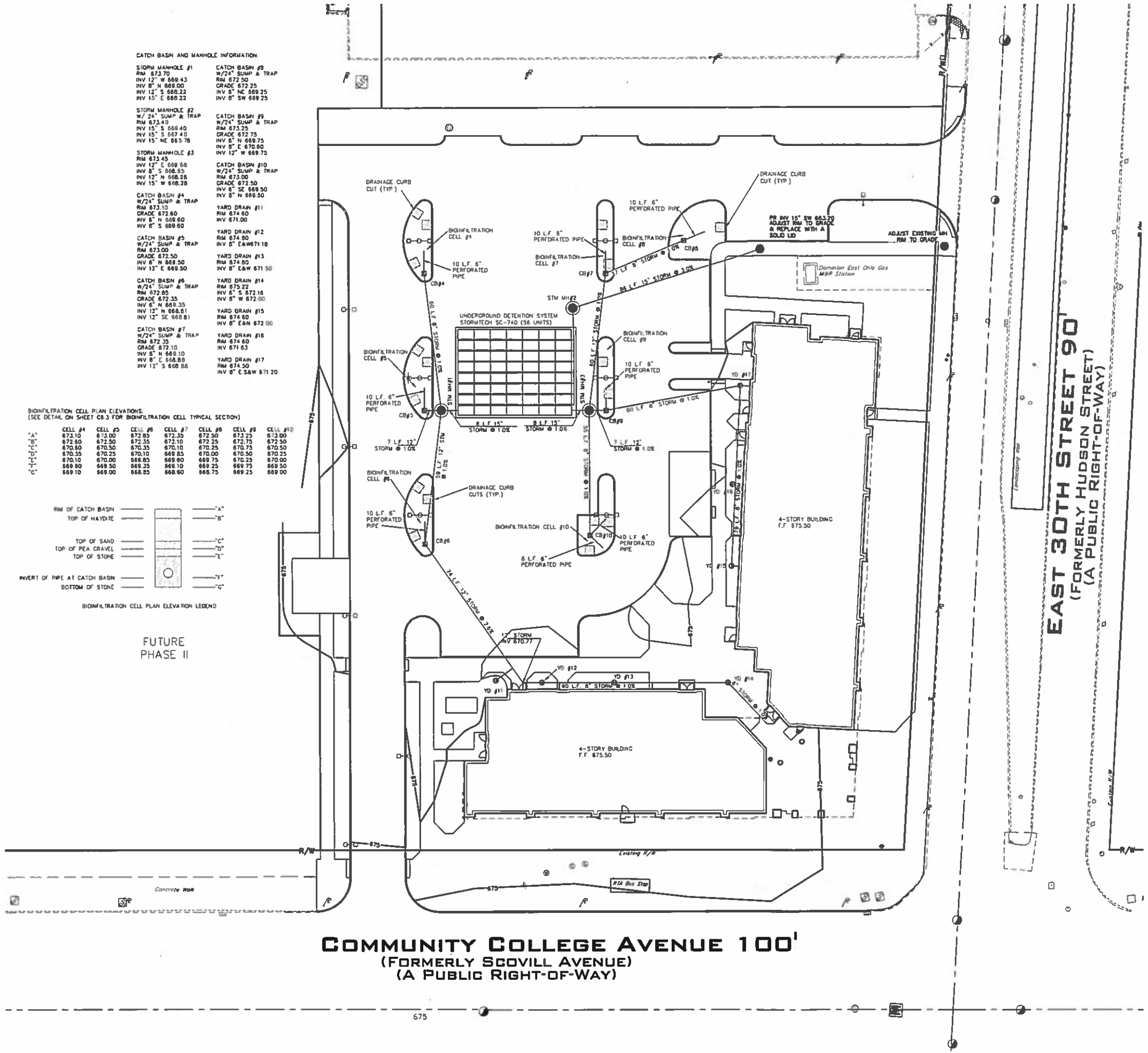

SWPPP NOTES:

POST DEVELOPED WEIGHTED C

SURFACE	AREA SF	AREA AC	C	A×C
BUILDING	15,435	0.3543	0.90	0.3189
SIDEWALK	11,622	0.2668	0.90	0.2401
PAVED	37,123	0.8522	0.90	0.7670
OPEN	22,904	0.5258	0.45	0.2366
TOTAL	87,085	1.9992		1.5626

WEIGHTED C = 1.5626 / 1.9992 = 0.782 = 0.78

POST CONSTRUCTION WATER QUALITY
THIS PROJECT IS A REDEVELOPMENT, THEREFORE ONLY 20% OF THE WATER QUALITY VOLUME NEEDS TO BE TREATED.

WATER QUALITY VOLUME
WQv = P × C × (A/12) × 20%
P = 0.75 inches
C = 0.858(I^3)-0.78(I^2)+.774(I)+.04
I = PERCENTAGE OF IMPERVIOUS AREA
I = 1.5626 / 1.9992 = 0.78
C = 0.858(0.78^3)-.78(0.78^2)+.774(0.78)+.04
C = 0.58
WQv = 0.75 x 0.58 x (1.9992/12) x 20% = 0.0145 ACRE-FT
WQv = 631 CF

ADDITIONAL 20% FOR SEDIMENT STORAGE
SSv = WQv x 20% = 631 x 20% = 126 CF

TOTAL WATER QUALITY VOLUME IS
TWQv = WQv + SSv = 631 CF + 126 CF = 757 CF

GREEN COMMUNITIES

OPTION 1 RETAIN INFILTRATE, AND/OR HARVEST THE FIRST 1/2" OF RAIN OVER THE ENTIRE SITE.

VOLUME = 1/2" x 1FT/12" x 87,085 SF = 3,629 CF

THE VOLUME OF STORM WATER REQUIRED TO BE RETAINED, INFILTRATED OR REUSED FOR GREEN COMMUNITIES IS LARGER THEN THE VOLUME REQUIRED TO BE TREATED PER THE OHIO EPA. THEREFORE THE POST CONSTRUCTION WATER QUALITY VOLUME WILL BE TREATED WITHIN THE SYSTEM DESIGNED TO ACHIEVE THE GREEN COMMUNITY REQUIREMENTS.

STORMWATER QUALITY NARRATIVE.

POST-CONSTRUCTION WATER QUALITY WILL BE ACHIEVED BY USING THE UNDERGROUND DETENTION SYSTEM AND INFILTRATING THE STORMWATER INTO THE NATURALLY SANDY SOILS ON THE SITE. THE TOTAL AREA FOR PHASE I IS 1.352 ACRES AND THE REDEVELOPMENT WATER QUALITY VOLUME FOR THAT AREA INCLUDING AN ADDITIONAL 20% FOR SEDIMENT STORAGE IS 950 CUBIC FEET. THE STORM SEWER WILL COLLECT RUNOFF FROM THE BUILDING AND PARKING LOT AND DISCHARGE THE RUNOFF INTO THE UNDERGROUND DETENTION SYSTEM. STORMWATER WILL ENTER THE SYSTEM IN AN ISOLATOR ROW WHICH WILL TRAP MAJORITY OF THE SEDIMENT IN THE RUNOFF. THE ISOLATOR ROW CAN BE CLEANED AS SEDIMENT BUILDS UP IN THE SYSTEM. THE STORMWATER WILL FILL THE SYSTEM AND BEGIN INFILTRATING THE SANDY SOILS IMMEDIATELY. OUTLET PIPES TO DISCHARGE LARGER STORMS ARE ELEVATED FORCING THE INFILTRATION OF ALL STORMWATER BELOW THE OUTLET PIPES. LARGER STORMS WILL BE COLLECTED BY THE ELEVATED PIPES AND DISCHARGED TO A COMBINED SEWER IN EAST 30TH STREET.

LEGEND

- Monument Box Found
- = Iron Pin or Pipe Found
- = 5/8" Iron Pin Set and Capped Riverstone Company Dudley PS8747
- = P.K. Nail
- = Gas Meter
- = Gas Valve
- = Utility Pole
- = Light Pole
- = Guy Anchor & Line
- = Telephone Box
- = Electric Box
- = Cable Box
- = Bollard
- = Cleanout / Test Tee
- = Spot Elevation Tag
- = Hydrant
- = Water Service Valve
- = Water Valve
- = Water Meter
- = Reducer
- = Storm Manhole
- = Sanitary Manhole
- = Curb Inlet
- = Catch Basin
- = Property Line
- = Centerline

Ex. Parcel Line
Original Sublot Line
Original Lot Line
Centerline
Property Line
Right-of-way Line
Easement Line
Railroad Tracks

Existing / PROPOSED
Electric Line
Gas Line
Sanitary/Combination Sewer
Storm Sewer
Waterline
Fence Line (Wooden)
Fence Line (Chain-Link)
Guardrail

Ac.	Acres	Inv.	Invert
Adj.	Adjacent	L.C.A.	Limited Common Area
A.F.N.	Auditor's File Number	L.F.	Linear Feet
Asp.	Asphalt	Meas./M.	Measured
B.F.	Basement Floor	MH	Manhole
BW	Bottom of Wall	Obs.	Observed
Calc./C.	Calculated	Pg.	Page
CB	Catch Basin	P.P.N.	Permanent Parcel Number
C.C.M.R	Cuyahoga County Map Records	Prop.	Proposed
C.L.F.	Chain-link Fence	Rec./R.	Record
Clr.	Clears	R/W	Right-of-way
C.O.	Clean Out	San.	Sanitary
Comb.	Combination	S.F.	Square Feet
Conc.	Concrete	S/L	Sublot
Conn.	Connection	Strm.	Storm
D.H.	Drill Hole	T.B.M.	Temporary Bench Mark
D.I.W.M.	Ductile Iron Water Main	TBR	To Be Removed
		T/C	Top of Curb
Elec	Electric	Tele	Telephone
Elev	Elevation	T.F.	Top Of Footer
Encr	Encroaches	T.T.	Test Tee
Ex.	Existing	TW	Top of Wall
F.F.	Finished Floor	Typ.	Typical
GUT	Gutter	Vol.	Volume
		Wat.	Water

GRAPHIC SCALE
(IN FEET)
1 inch = 20 ft.

48 HOURS BEFORE YOU DIG CALL 800-362-2764 OHIO UTILITIES PROTECTION SERVICE

STATE OF OHIO
DAVID A. PIETRANTONE
E-61798
REGISTERED
PROFESSIONAL ENGINEER

CEDAR EXTENSION REDEVELOPMENT PHASE I

CUYAHOGA METROPOLITAN HOUSING AUTHORITY

EAST 30TH STREET

CLEVELAND, OHIO

Issue:

02.11.2015 - 90% REVIEW SET
02.24.2015 - 90% FOR PERMIT
03.24.2015 - FOR PERMIT
04.07.2015 - FOR FINAL PRICING
06.30.2015 - CITY COMMENTS
07.30.2015 - CSWCD & NEORSD COMMENTS
09.15.2015 - ADDENDUM #1
11.09.2015 - CSWCD & NEORSD COMMENTS

SWPPP
POST CONSTRUCTION

RIVERSTONE
LAND SURVEYING · ENGINEERING · DESIGN
2310 SUPERIOR AVENUE · SUITE 110
CLEVELAND · OHIO · 44114
PHONE (216) 241-2050 FAX (216) 241-9040
WWW.RIVERSTONESURVEY.COM

cityarchitecture
3636 Euclid Avenue
Suite 300 Cleveland,
Ohio 44115
phone 216.881.2444
fax 216.881.6713
www.cityarch.com

Project No.
02913
Riverstone Project: 13-286

Sheet Number:

C7.3

Copyright © 2015

©2014 THE RIVERSTONE COMPANY N:\2013 JOBS\13-286\dwg\13-286.dwg 11/9/2015 2:10:31 PM EST

SILT FENCE

DESCRIPTION:

SILT FENCE IS A SEDIMENT-TRAPPING PRACTICE UTILIZING A GEOTEXTILE FENCE, TOPOGRAPHY AND VEGETATION TO CAUSE SEDIMENT DEPOSITION. SILT FENCE REDUCES RUNOFF'S ABILITY TO TRANSPORT SEDIMENT BY PONDING RUNOFF AND DISSIPATING SMALL RILLS OF CONCENTRATED FLOW INTO UNIFORM SHEET FLOW.

CONDITIONS WHERE PRACTICE APPLIES:

SILT FENCE IS USED WHERE RUNOFF OCCURS AS SHEET FLOW OR WHERE FLOW THROUGH SMALL RILLS CAN BE CONVERTED TO SHEET FLOW. SILT FENCE CANNOT EFFECTIVELY TREAT FLOWS IN GULLIES, DITCHES OR CHANNELS. FOR MORE SEVERE CONDITIONS SEE SPECIFICATIONS FOR TEMPORARY DIVERSIONS, SEDIMENT TRAPS AND SEDIMENT BASINS.

PLANNING CONSIDERATIONS:

SILT FENCE VS TEMPORARY DIVERSIONS AND SETTLING PONDS – TO TREAT SHEET FLOW RUNOFF, SILT FENCE IS USED OR DIVERSIONS ARE CONSTRUCTED TO DIRECT RUNOFF TO A SEDIMENT POND. SILT FENCE IS MOST APPLICABLE FOR RELATIVELY SMALL AREAS WITH FLAT TOPOGRAPHY. SILT FENCE ALSO REQUIRES LESS SPACE AND CAUSES LESS DISTURBANCE. A SYSTEM OF DIVERSIONS AND SETTLING PONDS, ON THE OTHER HAND, HAS GREATER INTEGRITY COMPARED TO SILT FENCE, THEY CAN HANDLE MUCH GREATER FLOWS AND ARE MORE DURABLE AND EASIER TO CONSTRUCT CORRECTLY. AS A RESULT, EARTH DIVERSIONS AND SETTLING PONDS GENERALLY ARE RECOMMENDED OVER SILT FENCE.

DESIGN CRITERIA:

SILT FENCE AS A SEDIMENT CONTROL PRACTICE CONSISTS NOT ONLY OF THE FENCE ITSELF BUT, JUST AS IMPORTANTLY, IT ENTAILS TOPOGRAPHY. THIS IS A CRITICAL CONSIDERATION BECAUSE THE SEDIMENT REMOVAL PROCESS RELIES ON DEPOSITION NOT FILTERING, AS OFTEN ASSUMED. SILT FENCE WORKS BY DISPERSING FLOW, PONDING RUNOFF AND RELEASING DIFFUSE FLOW. HOWEVER, IF SILT FENCE IS USED WITHOUT REGARD TO A SITE'S TOPOGRAPHY, IT WILL TYPICALLY CONCENTRATE RUNOFF, INCREASING ITS ABILITY TO TRANSPORT SEDIMENT RATHER THAN CAUSING DEPOSITION.

LEVEL CONTOUR – FOR SILT FENCE TO ENHANCE DEPOSITION, IT MUST BE PLACED ON THE LEVEL CONTOUR OF THE LAND SO THAT FLOWS ARE DISSIPATED INTO UNIFORM SHEET FLOW, WHICH HAS LITTLE ENERGY FOR TRANSPORTING SEDIMENT. SILT FENCE SHOULD NEVER CONCENTRATE RUNOFF, WHICH WILL RESULT IF IT IS PLACED UP AND DOWN SLOPES RATHER THAN ON THE LEVEL CONTOUR.

FLAT SLOPES – SILT FENCE MUST ALSO BE USE ON THE FLATTEST AREAS AVAILABLE. BECAUSE OF THE GREAT IMPORTANCE SLOPE HAS ON WATER'S ABILITY TO TRANSPORT SEDIMENT, SILT FENCE SHOULD NEVER BE PLACED DIRECTLY AT THE TOE OF A SLOPE IF IT IS AT ALL POSSIBLE. IO PLACE IT SEVERAL FEET AWAY. SILT FENCE GENERALLY SHOULD BE PLACED ON THE FLATTEST AREA AVAILABLE TO INCREASE THE SHALLOW PONDING OF RUNOFF AND MAXIMIZE SPACE AVAILABLE FOR DEPOSITED SEDIMENT.

FLOW AROUND ENDS – TO PREVENT WATER PONDED BY THE SILT FENCE FROM FLOWING AROUND THE ENDS, EACH END MUST BE CONSTRUCTED UP-SLOPE SO THAT THE ENDS ARE AT A HIGHER ELEVATION.

VEGETATION – DENSE VEGETATION ALSO HAS THE EFFECT OF DISSIPATING FLOW ENERGIES AND CAUSING SEDIMENT DEPOSITION. SEDIMENT-TRAPPING EFFICIENCY WILL BE ENHANCED WHERE A DENSE STAND OF VEGETATION OCCURS FOR SEVERAL FEET BOTH BEHIND AND IN FRONT OF A SILT FENCE.

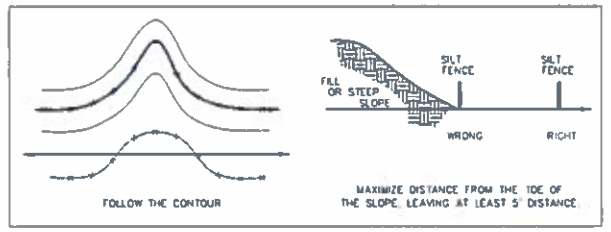

FABRIC PROPERTIES	VALUES	TEST METHOD
GRAB TENSILE STRENGTH	90 LB MINIMUM	ASTM D 1682
MULLEN BURST STRENGTH	190 PSI MINIMUM	ASTM D 3786
SLURRY FLOW RATE	0.3 GAL/MIN/SQ FT. MAXIMUM	
EQUIVALENT OPENING SIZE	40-80	US STD. SLEEVE CW-02215
ULTRAVIOLET RADIATION STABILITY	90% MINIMUM	ASTM-G-26

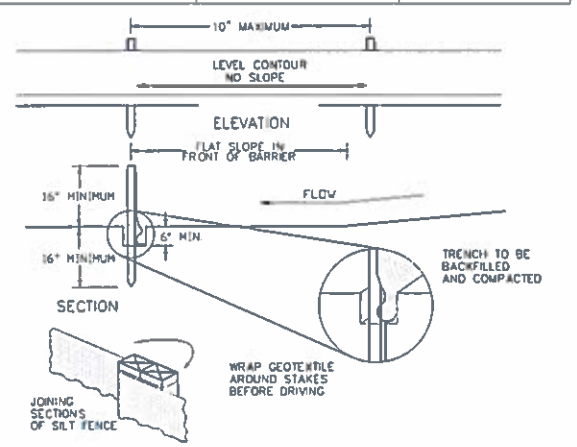

SILT FENCE
NTS

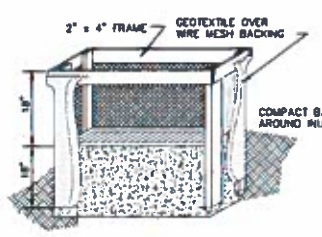

INLET PROTECTION IN SWALES, DITCH LINES OR YARD INLETS
NTS

SPECIFICATIONS FOR SILT FENCE:

1. SILT FENCE SHALL BE CONSTRUCTED BEFORE UP-SLOPE LAND DISTURBANCE BEGINS.
2. ALL SILT FENCE SHALL BE PLACED AS CLOSE TO THE CONTOUR AS POSSIBLE SO THAT WATER WILL NOT CONCENTRATE AT LOW POINTS IN THE FENCE AND SO THAT SMALL SWALES OR DEPRESSIONS WHICH MAY CARRY SMALL CONCENTRATED FLOWS TO THE SILT FENCE ARE DISSIPATED ALONG ITS LENGTH.
3. TO PREVENT WATER PONDED BY THE SILT FENCE FROM FLOWING AROUND THE ENDS, EACH END SHALL BE CONSTRUCTED UP-SLOPE SO THAT THE ENDS ARE AT A HIGHER ELEVATION.
4. WHERE POSSIBLE, SILT FENCE SHALL BE PLACE ON THE FLATTEST AREA AVAILABLE.
5. WHERE POSSIBLE, VEGETATION SHALL BE PRESERVED FOR 5 FT. (OR AS MUCH AS POSSIBLE) UP-SLOPE FROM THE SILT FENCE. IF VEGETATION IS REMOVED, IT SHALL BE REESTABLISHED WITHIN 7 DAYS FROM THE INSTALLATION OF THE SILT FENCE.
6. THE HEIGHT OF THE SILT FENCE SHALL BE A MINIMUM OF 16 IN. ABOVE THE ORIGINAL GROUND SURFACE.
7. THE SILT FENCE SHALL BE PLACED IN A TRENCH CUT A MINIMUM OF 6 IN. DEEP. THE TRENCH SHALL BE CUT WITH A TRENCHER, CABLE LAYING MACHINE OR OTHER SUITABLE DEVICE WHICH WILL ENSURE AN ADEQUATELY UNIFORM TRENCH DEPTH.
8. THE SILT FENCE SHALL BE PLACED WITH THE STAKES ON THE DOWNSLOPE SIDE OF THE GEOTEXTILE AND SO THAT 8 IN. OF CLOTH ARE BELOW THE GROUND SURFACE. EXCESS MATERIAL SHALL LAY ON THE BOTTOM OF THE 6 IN. DEEP TRENCH. THE TRENCH SHALL BE BACKFILLED AND COMPACTED.
9. SEAMS BETWEEN SECTION OF SILT FENCE SHALL BE OVERLAPPED WITH THE END STAKES OF EACH SECTION WRAPPED TOGETHER BEFORE DRIVING INTO THE GROUND.
10. MAINTENANCE – SILT FENCE SHALL ALLOW RUNOFF TO PASS ONLY AS DIFFUSE FLOW THROUGH THE GEOTEXTILE. IF RUNOFF DIVERTS THE SILT FENCE, FLOWS UNDER OR AROUND THE ENDS, OR IN ANY OTHER WAY BECOMES A CONCENTRATED FLOW, ONE OF THE FOLLOWING SHALL BE PERFORMED, AS APPROPRIATE: 1) THE LAYOUT OF THE SILT FENCE SHALL BE CHANGED, 2) ACCUMULATED SEDIMENT SHALL BE REMOVED, OR 3) OTHER PRACTICES SHALL BE INSTALLED.

CRITERIA FOR SILT FENCE MATERIALS:

1. FENCE POSTS – THE LENGTH SHALL BE A MINIMUM OF 32 IN. LONG. WOOD POSTS WILL BE 2-BY-2 IN. HARDWOOD OF SOUND QUALITY. THE MAXIMUM SPACING BETWEEN POSTS SHALL BE 10 FT.
2. SILT FENCE FABRIC (SEE CHART BELOW).
   1. INLET PROTECTION SHALL BE CONSTRUCTED EITHER BEFORE UP-SLOPE LAND DISTURBANCE BEGINS OR BEFORE THE STORM DRAIN BECOMES OPERATIONAL.
   2. THE EARTH AROUND THE INLET SHALL BE EXCAVATED COMPLETELY TO A DEPTH AT LEAST 18 IN.
   3. THE WOODEN FRAME SHALL BE CONSTRUCTED OF 2-BY-4 IN. CONSTRUCTION-GRADE LUMBER. THE 2-BY-4 IN. POSTS SHALL BE DRIVEN 1 FT. INTO THE GROUND AT FOUR CORNERS OF THE INLET AND THE TOP PORTION OF 2-BY-4 IN. FRAME ASSEMBLED USING THE OVERLAP JOINT SHOWN. THE TOP OF THE FRAME SHALL BE AT LEAST 6 IN. BELOW ADJACENT ROADS IF PONDED WATER WOULD POSE A SAFETY HAZARD TO TRAFFIC.
   4. WIRE MESH SHALL BE OF SUFFICIENT STRENGTH TO SUPPORT FABRIC WITH WATER FULLY IMPOUNDED AGAINST IT. IT SHALL BE STRETCHED TIGHTLY AROUND THE FRAME AND FASTENED SECURELY TO THE FRAME.
   5. GEOTEXTILE SHALL HAVE AN EQUIVALENT OPENING SIZE OF 20-40 SIEVE AND BE RESISTANT TO SUNLIGHT. IT SHALL BE STRETCHED TIGHTLY AROUND THE FRAME AND FASTENED SECURELY. IT SHALL EXTEND FROM THE TOP OF THE FRAME TO 18 IN. BELOW THE INLET NOTCH ELEVATION. THE GEOTEXTILE SHALL OVERLAP ACROSS ONE SIDE OF THE INLET SO THE ENDS OF THE CLOTH ARE NOT FASTENED TO THE SAME POST.
   6. BACKFILL SHALL BE PLACED AROUND THE INLET IN COMPACTED 6 IN. LAYERS UNTIL THE EARTH IS EVEN WITH NOTCH ELEVATION ON ENDS AND TOP ELEVATION ON SIDES.
   7. A COMPACTED EARTH DIKE OR A CHECK DAM SHALL BE CONSTRUCTED IN THE DITCH LINE BELOW THE INLET IF THE INLET IS NOT IN A DEPRESSION AND IF RUNOFF BYPASSING THE INLET WILL NOT FLOW TO A SETTLING POND. THE TOP OF EARTH DIKES SHALL BE AT LEAST 6 IN. HIGHER THAN THE TOP OF THE FRAME.

DRAINAGE AREA:

1. INLET PROTECTION SHALL BE CONSTRUCTED EITHER BEFORE UP-SLOPE LAND DISTURBANCE BEGINS OR BEFORE THE STORM DRAIN BECOME OPERATIONAL.
2. THE WOODEN FRAME IS TO BE CONSTRUCTED OF 2-BY-4 IN. CONSTRUCTION-GRADE LUMBER. THE END SPACERS SHALL BE A MINIMUM OF 1 FT. BEYOND BOTH ENDS OF THE THROAT OPENING. THE ANCHORS SHALL BE NAILED TO 2-BY-4 IN. STAKES DRIVEN ON THE OPPOSITE SIDE OF THE CURB.
3. THE WIRE MESH SHALL BE OF SUFFICIENT STRENGTH TO SUPPORT FABRIC AND STONE. IT SHALL BE A CONTINUOUS PIECE WITH A MINIMUM WIDTH OF 30 IN. AND 4 FT. LONGER THAN THE THROAT LENGTH OF THE INLET, 2 FT. ON EACH SIDE.
4. GEOTEXTILE CLOTH SHALL HAVE AN EQUIVALENT OPENING SIZE (EOS) OF 20-40 SIEVE AND BE RESISTANT TO SUNLIGHT. IT SHALL BE AT LEAST THE SAME SIZE AS THE WIRE MESH.
5. THE WIRE MESH AND GEOTEXTILE CLOTH SHALL BE FORMED TO THE CONCRETE GUTTER AND AGAINST THE FACE OF THE CURB ON BOTH SIDE OF THE INLET AND SECURELY FASTENED TO THE 2-BY-4 IN. FRAME.
6. TWO-INCH STONE SHALL BE PLACED OVER THE WIRE MESH AND GEOTEXTILE IN SUCH A MANNER AS TO PREVENT WATER FROM ENTERING THE INLET UNDER OR AROUND THE GEOTEXTILE CLOTH.

DISPERSING FLOW – PROPER APPLICATIONS OF SILT FENCE WILL ALLOW ALL THE INTERCEPTED RUNOFF TO PASS AS DIFFUSED FLOW THROUGH THE GEOTEXTILE. RUNOFF SHOULD NEVER OVERTOP SILT FENCE, FLOW AROUND THE ENDS, OR IN ANY OTHER WAY FLOW AS CONCENTRATED FLOW FROM THE PRACTICE. IF THIS DOES OCCUR, MAINTENANCE, ALTERNATIVE SILT FENCE LAYOUT, OR OTHER PRACTICES ARE NEEDED.

SILT FENCE MAXIMUM DRAINAGE AREA BASED ON SLOPE AND SLOPE LENGTH

SLOPE		SLOPE LENGTH (FT.)
0% – 2%	FLATTER THAN 50:1	250
2% – 10%	50:1 – 10:1	125
10% – 20%	10:1 – 5:1	100
20% – 33%	5:1 – 3:1	75
33% – 50%	3:1 – 2:1	50
> 50%	> 2:1	25

NOTE: FOR LARGER DRAINAGE AREAS, SEE STANDARDS FOR TEMPORARY DIVERSIONS, SEDIMENT TRAPS AND SEDIMENT BASINS.

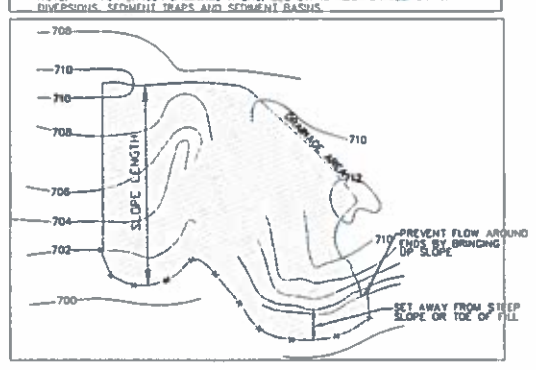

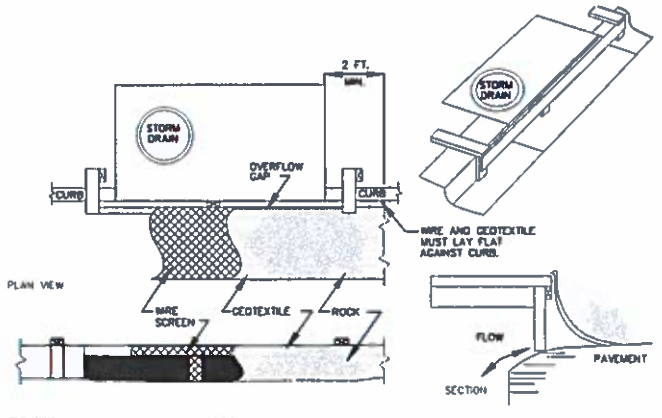

CURB INLET PROTECTION
NTS

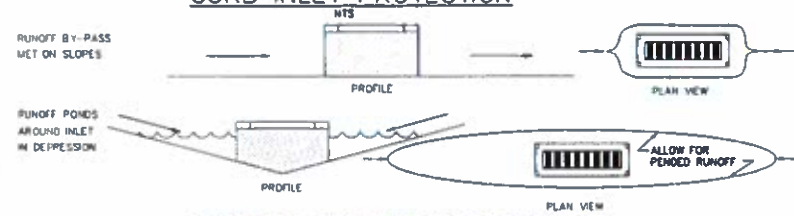

STORM DRAIN INLET PROTECTION
NTS

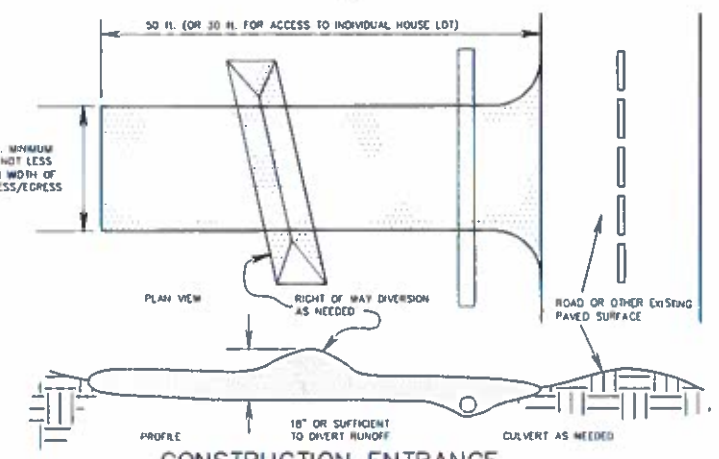

CONSTRUCTION ENTRANCE
NTS

CONSTRUCTION ENTRANCE

DESCRIPTION: A CONSTRUCTION ENTRANCE IS A STABILIZED PAD OF AGGREGATE OVER A GEOTEXTILE BASE AND IS USED TO REDUCE THE AMOUNT OF MUD TRACKED OFF-SITE WITH CONSTRUCTION TRAFFIC.

CONDITIONS WHERE PRACTICE APPLIES:
A CONSTRUCTION ENTRANCE SHOULD BE USED:
* WHERE CONSTRUCTION VEHICLES LEAVE ACTIVE CONSTRUCTION AREAS ONTO SURFACES WHERE RUNOFF IS NOT CHECKED BY SEDIMENT CONTROLS.
* AT ALL POINTS OF EGRESS TO PUBLIC ROADS.
* WHERE FREQUENT VEHICLES AND EQUIPMENT INGRESS/EGRESS IS EXPECTED SUCH AS AT THE AT THE ENTRANCE OF INDIVIDUAL BUILDING LOTS.

PLANNING CONSIDERATIONS:
THIS PRACTICE SHOULD NOT BE RELIED ON TO REMOVE MUD FROM CONSTRUCTION TRAFFIC. MOST MUD IS FLUNG FROM TIRES AS VEHICLES REACH SPEEDS HIGHER THAN IS REACHED ON SITE. THE BEST APPROACH TO PREVENTING OFF-SITE TRACKING IS TO KEEP VEHICLES THAT FREQUENTLY ENTER AND LEAVE A SITE, AWAY FROM MUDDY AREAS IN THE FIRST PLACE. VEHICLES SHOULD BE RESTRICTED TO STABILIZED AREAS TO THE EXTENT PRACTICAL, AND AREAS WHERE FREQUENT INGRESS/EGRESS IS EXPECTED SHOULD BE STABILIZED.

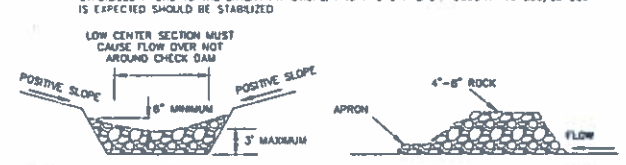

1. THE CHECK DAM SHALL BE CONSTRUCTED OF 4-8 INCH DIAMETER STONE, PLACED SO THAT IT COMPLETELY COVERS THE WIDTH OF THE CHANNEL.
2. THE TOP OF THE CHECK DAM SHALL BE CONSTRUCTED SO THAT THE CENTER IS APPROXIMATELY 6 INCHES LOWER THAN THE OUTER EDGES, SO WATER WILL FLOW ACROSS THE CENTER AND NOT AROUND THE ENDS.
3. THE MAXIMUM HEIGHT OF THE CHECK DAM AT THE CENTER OF THE WEIR SHALL NOT EXCEED 3 FOOT.
4. SPACING BETWEEN DAMS SHALL BE AS SHOWN IN THE PLANS.

CHECK DAM
NTS

STORM DRAIN INLET PROTECTION

DESCRIPTION:

STORM DRAIN INLET PROTECTION CONSISTS OF A GEOTEXTILE BARRIER SUPPORTED AROUND OR ACROSS A STORM DRAIN INLET. IT IS USED TO PREVENT SEDIMENT-LADEN WATER FROM ENTERING A STORM DRAIN SYSTEM. IT REDUCES THE RATE AT WHICH SEDIMENT-LADEN WATER MAY ENTER AN INLET THEREBY CAUSING PONDING AND SETTLING OF SEDIMENT.

CONDITIONS WHERE PRACTICE APPLIES AND PLANNING CONSIDERATIONS:

THIS PRACTICE IS NOT GENERALLY RECOMMENDED AS A PRIMARY MEANS OF SEDIMENT CONTROL. IT SHOULD ONLY BE USED IF IT IS NOT POSSIBLE TO TEMPORARILY DIVERT THE STORM DRAIN OUTFALL INTO A SEDIMENT TRAP OR SEDIMENT BASIN OR IF IT IS TO BE USED ONLY FOR A SHORT PERIOD OF TIME DURING THE CONSTRUCTION PROCESS.

INLET PROTECTION IN EFFECT BLOCKS STORM DRAIN INLETS. THE RESULT FROM BLOCKING STORM DRAIN INLETS WILL HAVE ON THE SITE'S DRAINAGE MUST BE CONSIDERED. LONG SLOPING STREETS OR DITCHES DESIGNED WITH SEVERAL INLETS ALONG THEIR LENGTH MAY HAVE A SIGNIFICANT AMOUNT OF SURFACE FLOW ACCUMULATE IF INLET PROTECTION IS USED. IN LOW AREAS, A POND WILL FORM AROUND INLETS. PONDING IS NECESSARY FOR REMOVING SEDIMENT FROM RUNOFF AND SHOULD BE ENCOURAGED IN CONJUNCTION WITH INLET PROTECTION.

SPECIFICATIONS FOR CURB INLET PROTECTION:

1. INLET PROTECTION SHALL BE CONSTRUCTED EITHER BEFORE UPSLOPE LAND DISTURBANCE BEGINS OR BEFORE THE STORM DRAIN BECOMES OPERATIONAL.
2. THE WOODEN FRAME IS TO BE CONSTRUCTED OF 2-BY-4-IN. CONSTRUCTION-GRADE LUMBER. THE END SPACERS SHALL BE A MINIMUM OF 1 FT BEYOND BOTH ENDS OF THE THROAT OPENING. THE ANCHORS SHALL BE NAILED TO 2-BY-4-IN. STAKES DRIVEN ON THE OPPOSITE SIDE OF THE CURB.
3. THE WIRE MESH SHALL BE OF SUFFICIENT STRENGTH TO SUPPORT FABRIC AND STONE. IT SHALL BE A CONTINUOUS PIECE WITH A MINIMUM WIDTH OF 30 IN. AND 4 FT LONGER THAT THE THROAT LENGTH OF THE INLET, 2 FT ON EACH SIDE.
4. GEOTEXTILE CLOTH SHALL HAVE AN EQUIVALENT OPENING SIZE (EOS) OF 20-40 SLEEVE AND BE RESISTANT TO SUNLIGHT. IT SHALL BE AT LEAST THE SAME SIZE AS THE WIRE MESH.
5. THE WIRE MESH AND GEOTEXTILE CLOTH SHALL BE FORMED TO THE CONCRETE GUTTER AND AGAINST THE FACE OF THE CURB ON BOTH SIDES OF THE INLET AND SECURELY FASTENED TO THE 2-BY-4-IN FRAME.
6. TWO-INCH STONE SHALL BE PLACED OVER THE WIRE MESH AND GEOTEXTILE IN SUCH A MANNER AS TO PREVENT WATER FROM ENTERING THE INLET UNDER OR AROUND THE GEOTEXTILE CLOTH.

EROSION NOTES

SEDIMENT PONDS/TRAPS AND PERIMETER CONTROLS SHALL BE IMPLEMENTED AS A FIRST STEP OF GRADING AND WITHIN 7 DAYS FROM THE START OF GRUBBING AND SHALL CONTINUE TO FUNCTION UNTIL UPLAND AREAS ARE STABILIZED.

DISTURBED AREAS WITHIN 50 FEET OF A STREAM, WHICH WILL REMAIN UNWORKED FOR A PERIOD OF 21 DAYS OR MORE, SHALL BE STABILIZED WITH SEEDING AND MULCHING OR OTHER APPROPRIATE MEANS WITHIN 2 DAYS.

DISTURBED AREAS WHICH WILL REMAIN UNWORKED FOR A PERIOD OF 21 DAYS OR MORE, SHALL BE STABILIZED WITH SEEDING AND MULCHING OR OTHER APPROPRIATE MEANS WITHIN 7 DAYS.

EROSION CONTROL BLANKETS WITH MATTING WILL BE USED ON DITCHES GREATER THAN 1.5% AND ALL OTHER SLOPES GREATER THAN 6% GRADE.

DISTURBED AREAS THAT WILL BE IDLE OVER WINTER SHALL BE STABILIZED PRIOR TO NOVEMBER 1.

NO SOLID OR LIQUID WASTE SHALL BE DISCHARGED INTO STORM WATER RUNOFF.

OFF-SITE VEHICLE TRACKING SEDIMENT SHALL BE MINIMIZED. CONSTRUCTION VEHICLES ARE LIMITED TO THE CONSTRUCTION ACCESS ROAD(S) NOTED ON THE PLAN.

ALL EROSION AND SEDIMENT CONTROL PRACTICES MUST MEET THE STANDARDS AND SPECIFICATIONS OF THE OHIO RAINWATER AND LAND DEVELOPMENT HANDBOOK (1998).

OTHER EROSION AND SEDIMENT CONTROL ITEMS MAY BE NECESSARY DUE TO ENVIRONMENTAL CONDITIONS. A TEMPORARY COVERING OF STRAW MULCH OVER BARE GROUND THROUGHOUT THE DURATION OF THE PROJECT IS EFFECTIVE MEANS OF MINIMIZING EROSION. A STOCKPILE OF STRAW BALES SHOULD BE ON HAND.

REGULAR INSPECTION AND MAINTENANCE WILL BE PROVIDED FOR ALL EROSION AND SEDIMENT CONTROL PRACTICES. PERMANENT RECORDS OF MAINTENANCE AND INSPECTIONS MUST BE KEPT THROUGHOUT THE CONSTRUCTION PERIOD. INSPECTIONS MUST BE MADE A MINIMUM OF ONCE EVERY 7 DAYS AND IMMEDIATELY AFTER STORM EVENTS GREATER THAN 0.5 INCHES OF RAIN IN A 24-HOUR PERIOD. PROVIDE NAME OF INSPECTOR, MAJOR OBSERVATIONS, DATE OF INSPECTION AND CORRECTIVE MEASURES TAKEN.

SPECIFICATIONS FOR CONSTRUCTION ENTRANCE:

1. STONE SIZE – TWO-INCH STONE SHALL BE USED, OR RECYCLED CONCRETE EQUIVALENT.
2. LENGTH – THE CONSTRUCTION ENTRANCE SHALL BE AS LONG AS REQUIRED TO STABILIZE HIGH TRAFFIC AREAS BUT NOT LESS THAN 50 FT. (EXCEPT ON SINGLE RESIDENCE LOT WHERE A 30-FT MINIMUM LENGTH APPLIES).
3. THICKNESS – THE STONE LAYER SHALL BE AT LEAST 6 IN. THICK.
4. WIDTH – THE ENTRANCE SHALL BE AT LEAST 10 FT. WIDE, BUT NOT LESS THAN THE FULL WIDTH AT POINTS WHERE INGRESS AND EGRESS OCCURS.
5. BEDDING – A GEOTEXTILE SHALL BE PLACED OVER THE ENTIRE AREA PRIOR TO PLACING STONE. IT SHALL HAVE A GRAB TENSILE STRENGTH OF AT LEAST 200 LB AND A MULLEN BURST STRENGTH OF AT LEAST 190 LB.
6. CULVERT – A PIPE OR CULVERT SHALL BE CONSTRUCTED UNDER THE ENTRANCE IF NEEDED TO PREVENT SURFACE WATER FLOWING ACROSS THE ENTRANCE FROM BEING DIRECTED OUT ONTO PAVED SURFACES.
7. WATER BAR – A WATER BAR SHALL BE CONSTRUCTED AS PART OF THE CONSTRUCTION ENTRANCE IF NEEDED TO PREVENT SURFACE RUNOFF FROM FLOWING THE LENGTH OF THE CONSTRUCTION ENTRANCE AND OUT ONTO PAVED SURFACES.
8. MAINTENANCE – TOP DRESSING OF ADDITIONAL STONE SHALL BE APPLIED AS CONDITIONS DEMAND. MUD SPILLED, DROPPED, WASHED OR TRACKED ONTO PUBLIC ROADS, OR ANY SURFACE WHERE RUNOFF IS NOT CHECKED BY SEDIMENT CONTROLS, SHALL BE REMOVED IMMEDIATELY. REMOVAL SHALL BE ACCOMPLISHED BY SCRAPING OR SWEEPING.
9. CONSTRUCTION ENTRANCES SHALL NOT BE RELIED UPON TO REMOVE MUD FROM VEHICLES AND PREVENT OFF-SITE TRACKING. VEHICLES THAT ENTER AND LEAVE THE CONSTRUCTION SITE SHALL BE RESTRICTED FROM MUDDY AREAS.

STATE OF OHIO
DAVID A. PIETRANTONE
E-61756
REGISTERED
PROFESSIONAL ENGINEER

CEDAR EXTENSION REDEVELOPMENT PHASE I

CUYAHOGA METROPOLITAN HOUSING AUTHORITY

EAST 30TH STREET

CLEVELAND, OHIO

Issue
02.11.2015 - 90% REVIEW SET
02.24.2015 - 90% FOR PERMIT
03.24.2015 - FOR PERMIT
04.07.2015 - FOR FINAL PRICING
06.30.2015 - CITY COMMENTS
07.30.2015 - CSWCD & NEORSD COMMENTS
09.15.2015 - ADDENDUM #1
11.09.2015 - CSWCD & NEORSD COMMENTS

SWPPP NOTES & DETAILS

RIVERSTONE
LAND SUBDIVISING · ENGINEERING · DESIGN
2310 SUPERIOR AVENUE · SUITE 110
CLEVELAND, OHIO 44114
PHONE: (216) 241-2200 · FAX: (216) 241-2240
WWW.RIVERSTONESURVEY.COM

cityarchitecture
3636 Euclid Avenue
Suite 300 Cleveland,
Ohio 44115
phone 216.881.2444
fax 216.881.8713
www.cityarch.com

Project No.
02913
Riverstone Project. 13-286

Sheet Number:

C 7.4

Copyright © 2015

48 HOURS BEFORE YOU DIG CALL 1-800-362-2764 OHIO UTILITIES PROTECTION SERVICE

©2015 THE RIVERSTONE COMPANY N.2013 JOB(13-286 DWG(13-286 T&D.DWG 11/9/2015 2:25:26 PM EST

AREA REQUIRING TEMPORARY STABILIZATION	TIME FRAME FOR SEEDING
ANY DISTURBED AREA WITHIN 50' OF A SURFACE WATER OF THE STATE AND NOT AT FINAL GRADE	WITHIN 2 DAYS OF THE MOST RECENT DISTURBANCE IF THE AREA WILL REMAIN IDLE FOR 14 DAYS OR MORE
DISTURBED AREAS THAT WILL BE DORMANT FOR MORE THAN 14 DAYS BUT LESS THAN 1 YEAR AND NOT WITHIN 50' OF A SURFACE WATER OF THE STATE	WITHIN 7 DAYS OF THE MOST RECENT DISTURBANCE WITHIN THE AREA
DISTURBED AREAS THAT WILL BE IDLE OVER WINTER	PRIOR TO THE ONSET OF WINTER

TEMPORARY SEEDING MIXTURE

SEEDING DATES	SPECIES	LB./1,000 sq ft.	per Acre
MARCH 1 TO AUGUST 15	OATS TALL FESCUE ANNUAL RYEGRASS	3 1 1	4 BUSHEL 40 LB 40 LB
	PERENNIAL RYEGRASS TALL FESCUE ANNUAL RYEGRASS	1 1 1	40 LB 40 LB 40 LB
AUGUST 15 TO NOVEMBER 1	RYE TALL FESCUE ANNUAL RYEGRASS	3 1 1	2 BUSHEL 40 LB 40 LB
	WHEAT TALL FESCUE ANNUAL RYEGRASS	1 1 1	2 BUSHEL 40 LB 40 LB
	PERENNIAL RYEGRASS TALL FESCUE ANNUAL RYEGRASS	1 1 1	40 LB 40 LB 40 LB
NOVEMBER 1 TO SPRING SEEDING	USE MULCH ONLY. SODDING PRACTICES OR DORMANT SEEDING		

AREA REQUIRING PERMANENT STABILIZATION	TIME FRAME FOR SEEDING
ANY AREAS THAT WILL LIE DORMANT FOR 1 YEAR OR MORE	WITHIN SEVEN DAYS OF THE MOST RECENT DISTURBANCE
ANY AREAS WITHIN 50' OF A STREAM AND AT FINAL GRADE	WITHIN TWO DAYS OF REACHING FINAL GRADE
ANY OTHER AREAS AT FINAL GRADE	WITHIN SEVEN DAYS OF REACHING FINAL GRADE WITHIN THAT AREA

PERMANENT SEEDING MIXTURE

SEEDING DATES	SPECIES	LB./1,000 sq ft.	per Acre
MARCH 15 TO OCTOBER 1	TALL FESCUE TURF-TYPE (DWARF FESCUE ANNUAL RYEGRASS	1 1	40-50 LBS 40 LB
	PERENNIAL RYEGRASS TALL FESCUE ANNUAL RYEGRASS	1 1 1	40 LB 40 LB 40 LB
AUGUST 15 TO NOVEMBER 1	RYE TALL FESCUE ANNUAL RYEGRASS	3 1 1	2 BUSHEL 40 LB 40 LB
	WHEAT TALL FESCUE ANNUAL RYEGRASS	1 1 1	2 BUSHEL 40 LB 40 LB
	PERENNIAL RYEGRASS TALL FESCUE ANNUAL RYEGRASS	1 1 1	40 LB 40 LB 40 LB
NOVEMBER 1 TO SPRING SEEDING	USE MULCH ONLY. SODDING PRACTICES OR DORMANT SEEDING		

PRE-CONSTRUCTION SWPPP MEETING
PRIOR TO CONSTRUCTION THE PERMITTEE SHALL INFORM ALL CONTRACTORS AND SUBCONTRACTORS INVOLVED WITH THE IMPLEMENTATION OF THE SWPPP AND OF THE TERMS AND CONDITIONS OF THE OHIO EPA CONSTRUCTION GENERAL PERMIT. THE PERMITTEE SHALL MAINTAIN A WRITTEN DOCUMENT CONTAINING SIGNATURES AS PROOF OF ACKNOWLEDGMENT OF THE CONDITIONS AND RESPONSIBILITIES OF THE SWPPP

INSPECTION DURING CONSTRUCTION
REGULAR INSPECTION AND MAINTENANCE IS TO BE PROVIDED FOR ALL EROSION AND SEDIMENT CONTROL PRACTICES DURING CONSTRUCTION. PERMANENT RECORDS OF MAINTENANCE AND INSPECTIONS MUST BE KEPT THROUGHOUT THE CONSTRUCTION PERIOD AND FOR 3 YEARS AFTER TERMINATION OF CONSTRUCTION ACTIVITIES. INSPECTIONS BY QUALIFIED INSPECTION PERSONEL MUST BE MADE A MINIMUM OF ONCE EVERY 7 DAYS AND IMMEDIATELY AFTER STORM EVENTS GREATER THEN 0.5 INCHES OF RAIN IN A 24-HOUR PERIOD. IF THE INSPECTION REVEALS THAT A CONTROL PRACTICE IS IN NEED OF REPAIR OR MAINTENANCE IS REQUIRED, IT MUST BE REPAIRED WITHIN 3 DAYS OF THE INSPECTION. SEDIMENT SETTLING PONDS MUST BE REPAIRED WITHIN 10 DAYS OF INSPECTION. INSPECTION REPORT SHALL PROVIDE NAME OF INSPECTOR, MAJOR OBSERVATIONS, DATE OF INSPECTION, CORRECTIVE MEASURES TAKEN TO COMPLY WITH THE REQUIREMENTS IN "RAINWATER & LAND DEVELOPMENT" (2006) AND SIGNED BY THE QUALIFIED INSPECTOR. MISSING BMPS REQUIRED BY THE SWPPP ARE REQUIRED TO BE INSTALLED WITHIN 10 DAYS OF THE INSPECTION. IF DURING INSPECTIONS IT IS DETERMINED THAT A BMP IS NOT EFFECTIVE AND THAT ANOTHER BMP IS NEEDED TO PROVIDE ADEQUATE CONTROL ON SITE, THE SWPPP SHALL BE AMENDED AND THE BMP SHALL BE INSTALLED WITHIN 10 DAYS FROM THE DATE OF INSPECTION

IF SITE IS DORMANT FOR A LONG PERIOD AND IS STABILIZED A WAIVER REQUEST MAY BE SUBMITTED TO THE OHIO EPA TO REDUCE SITE INSPECTIONS TO A MONTHLY BASIS.

POST CONSTRUCTION
UPON COMPLETION OF SITE STABILIZATION, A NOTICE OF TERMINATION SHALL BE FILED WITH THE OHIO EPA THE RESPONSIBLE PARTY SHALL COMPILE ALL INSPECTIONS, SIGN CERTIFICATION ON THE TITLE SHEET AND KEEP RECORDS FOR A MINIMUM OF 3 YEARS AFTER THE NOTICE OF TERMINATION WAS FILED.

POST CONSTRUCTION INSPECTION AND MAINTENANCE OF POST CONSTRUCTION BMPS SHALL BE THE RESPONSIBILITY OF THE DEVELOPMENT OWNER. INSPECTION SHALL BE DONE BY A CONTRACTOR SUITED FOR SUCH INSPECTIONS AND FUNDED BY THE DEVELOPMENT OWNER. CONTRACTOR SHALL REPORT FINDINGS DIRECTLY TO THE DEVELOPMENT OWNER.

ADDITIONAL CONSTRUCTION SITE POLLUTION CONTROLS – OHIO RAINWATER AND LAND DEVELOPMENT MANUAL (2006)

1. CONSTRUCTION PERSONNEL, INCLUDING SUBCONTRACTORS WHO MAY USE OR HANDLE HAZARDOUS OR TOXIC MATERIALS, SHALL BE MADE AWARE OF THE FOLLOWING GENERAL GUIDELINES REGARDING DISPOSAL AND HANDLING OF HAZARDOUS AND CONSTRUCTION WASTES.
   - PREVENT SPILLS
   - USE PRODUCTS UP
   - FOLLOW LABEL DIRECTIONS FOR DISPOSAL
   - REMOVE LIDS FROM EMPTY BOTTLES AND CAN WHEN DISPOSING IN TRASH
   - RECYCLE WASTES WHENEVER POSSIBLE
   - DON'T POUR INTO WATERWAYS, STORM DRAINS OR ONTO THE GROUND
   - DON'T POUR DOWN THE SINK, FLOOR DRAIN OR SEPTIC TANKS
   - DON'T BURY CHEMICALS OR CONTAINERS
   - DON'T BURN CHEMICALS OR CONTAINERS
   - DON'T MIX CHEMICALS TOGETHER
2. CONTAINERS SHALL BE PROVIDED FOR THE PROPER COLLECTION OF ALL WASTE MATERIAL INCLUDING CONSTRUCTION DEBRIS, TRASH, PETROLEUM PRODUCTS AND ANY HAZARDOUS MATERIALS USED ON SITE. CONTAINERS SHALL BE COVERED AND NOT LEAKING. ALL WASTE MATERIAL SHALL BE DISPOSED OF AT FACILITIES APPROVED FOR THAT MATERIAL. CONSTRUCTION DEMOLITION AND DEBRIS (CD&D) WASTE MUST BE DISPOSED OF AT AN OHIO EPA APPROVED CD&D LANDFILL.
3. NO CONSTRUCTION RELATED WASTE MATERIAL ARE TO BE BURIED ON-SITE. BY EXCEPTION, CLEAN FILL (BRICKS, HARDENED CONCRETE, SOIL) MAY BE UTILIZED IN A WAY WHICH DOES NOT ENCROACH UPON NATURAL WETLANDS, STREAMS OR FLOOD PLAINS OR RESULT IN THE CONTAMINATION OF WATER OF THE STATE.
4. HANDLING CONSTRUCTION CHEMICALS. MIXING, PUMPING, TRANSFERRING OR OTHER HANDLING OF CONSTRUCTION CHEMICALS SUCH AS FERTILIZER, LIME, ASPHALT, CONCRETE CURING COMPOUNDS, AND ALL OTHER POTENTIALLY HAZARDOUS MATERIALS SHALL BE PERFORMED IN AN AREA AWAY FROM ANY WATERCOURSE, DITCH OR STORM DRAIN.
5. EQUIPMENT FUELING AND MAINTENANCE. OIL CHANGING, ETC. SHALL BE PERFORMED AWAY FROM WATERCOURSES, DITCHES OR STORM DRAINS, IN AN AREA DESIGNATED FOR THAT PURPOSE. THE DESIGNATED AREA SHALL BE EQUIPPED FOR RECYCLING OIL AND CATCHING SPILLS. SECONDARY CONTAINMENT SHALL BE PROVIDED FOR ALL FUEL OIL STORAGE TANKS. THESE AREA MUST BE INSPECTED EVERY SEVEN DAYS AND WITHIN 24 HOURS OF A 0.5 INCH OR GREATER RAINFALL EVENT TO ENSURE THERE ARE NO EXPOSED MATERIAL WHICH WOULD CONTAMINATE STORM WATER. SITE OPERATORS MUST BE AWARE THAT SPILL PREVENTION CONTROL AND COUNTERMEASURES (SPCC) REQUIREMENTS MAY APPLY. AN SPCC PLAN IS REQUIRED FOR SITES WITH ONE SINGLE ABOVE GROUND TANK OF 800 GALLONS OR MORE, ACCUMULATIVE ABOVE GROUND STORAGE OF 1,320 GALLONS OR MORE OR 42,000 GALLONS OF UNDERGROUND STORAGE. CONTAMINATED SOILS MUST BE DISPOSED OF IN ACCORDANCE WITH ITEM 8.
6. CONCRETE WASH WATER SHALL NOT BE ALLOWED TO FLOW TO STREAM, DITCHES, STORM DRAINS OR ANY OTHER WATER CONVEYANCE. A SUMP OR PIT WITH NO POTENTIAL FOR DISCHARGE SHALL BE CONSTRUCTED IF NEEDED TO CONTAIN CONCRETE WASH WATER. FIELD TILE OR OTHER SUBSURFACE DRAINAGE STRUCTURES WITHIN 10 FT OF THE SUMP SHALL BE CUT AND PLUGGED FOR SMALL PROJECTS. TRUCK CHUTES MAY BE RINSED AWAY FROM ANY WATER CONVEYANCES.
7. SPILL REPORTING REQUIREMENTS. SPILLS ON PAVEMENT SHALL BE ABSORBED WITH SAWDUST OR KITTY LITTER AND DISPOSED OF WITH THE TRASH AT A LICENSED SANITARY LANDFILL. HAZARDOUS OR INDUSTRIAL WASTES SUCH AS MOST SOLVENTS, GASOLINE, OIL-BASED PAINTS AND CEMENT CURING COMPOUNDS REQUIRE SPECIAL HANDLING. SPILL SHALL BE REPORTED TO OHIO EPA (1-800-282-9378). SPILL OF 25 GALLONS OR MORE OF PETROLEUM PRODUCTS SHALL BE REPORTED TO OHIO EPA, THE LOCAL FIRE DEPARTMENT AND THE LOCAL EMERGENCY PLANNING COMMITTEE WITHIN 30 MIN OF THE DISCOVERY OF THE RELEASE. ALL SPILLS WHICH CONTACT WATERS OF THE STATE MUST BE REPORTED TO OHIO EPA.
8. CONTAMINATED SOILS. IF SUBSTANCES SUCH AS OIL, DIESEL FUEL, HYDRAULIC FLUID, ANTIFREEZE, ETC. ARE SPILLED, LEADED OR RELEASED ONTO THE SOIL, THE SOIL SHALL BE DUG UP AND DISPOSED OF A 1 A LICENSED SANITARY LANDFILL OR OTHER APPROVED PETROLEUM CONTAMINATED SOIL REMEDIATION FACILITY (NOT A CONSTRUCTION/DEMOLITION DEBRIS LANDFILL). NOTE THAT STORM WATER RUN OFF ASSOCIATED WITH CONTAMINATED SOILS ARE NOT AUTHORIZED UNDER OHIO EPA'S GENERAL STORM WATER PERMIT ASSOCIATED WITH CONSTRUCTION ACTIVITES.
9. OPEN BURNING. NO MATERIALS CONTAINING RUBBER, GREASE, ASPHALT OR PETROLEUM PRODUCTS, SUCH AS TIRES, AUTOPARTS, PLASTICS OR PLASTIC COATED WIRE MAY BE BURNED (OAC 3745-19). OPEN BURNING IS NOT ALLOWED IN RESTRICTED AREAS, WHICH ARE DEFINED AS:
   1) WITHIN CORPORATION LIMITS.
   2) WITHIN 1,000 FEET OUTSIDE A MUNICIPAL CORPORATION HAVE A POPULATION OF 1,000 TO 10,000.
   3) A ONE MILE ZONE OUTSIDE OF A CORPORATION OF 10,000 OR MORE.

   OUTSIDE RESTRICTED AREAS, NO OPEN BURNING IS ALLOWED WITHIN A 1,000 FEET OF AN INHABITED BUILDING ON ANOTHER PROPERTY. OPEN BURNING IS PERMISSIBLE IN A RESTRICTED AREA FOR: HEATING TAR, WELDING, SMUDGE POTS AND SIMILAR OCCUPATIONAL NEEDS, AND HEATING FOR WARMTH OR OUTDOOR BARBEQUES. OUTSIDE OF RESTRICTED AREAS, OPEN BURNING IS PERMISSIBLE FOR LANDSCAPE OR LAND-CLEARING WASTES (PLANT MATERIAL, WITH PRIOR WRITTEN PERMISSION FROM OHIO EPA), AND AGRICULTURAL WASTES, EXCLUDING BUILDINGS.
10. DUST CONTROL OR DUST SUPPRESSANTS SHALL BE USED TO PREVENT NUISANCE CONDITIONS, IN ACCORDANCE WITH THE MANUFACTURER'S SPECIFICATIONS AND IN A MANNER, WHICH PREVENT A DISCHARGE TO WATERS OF THE STATE. SUFFICIENT DISTANCE MUST BE PROVIDED BETWEEN APPLICATIONS AND NEARBY BRIDGES, CATCH BASINS, AND OTHER WATERWAYS. APPLICATION (EXCLUDING WATER) MAY NOT OCCUR WHEN RAIN IS IMMINENT AS NOTED IN THE SHORT TERM FORECAST USED OIL MAY NOT BE APPLIED FOR DUST CONTROL.
11. OTHER AIR PERMITTING REQUIREMENTS. CERTAIN ACTIVITES ASSOCIATED WITH CONSTRUCTION WILL REQUIRE AIR PERMITS INCLUDING BUT NOT LIMITED TO: MOBILE CONCRETE BATCH PLANTS, MOBILE ASPHALT PLANTS, CONCRETE CRUSHERS, LARGE GENERATORS, ETC. THESE ACTIVITES WILL REQUIRE SPECIFIC OHIO EPA AIR PERMITS FOR INSTALLATION AND OPERATION. OPERATORS MUST SEEK AUTHORIZATION FROM THE CORRESPONDING DISTRICT OF OHIO EPA. FOR DEMOLITION OF ALL COMMERCIAL SITES, A NOTIFICATION FOR RESTORATION AND DEMOLITION MUST BE SUBMITTED TO OHIO EPA TO DETERMINE IF ASBESTOS CORRECTIVE ACTIONS ARE REQUIRED.
12. PROCESS WASTE WATER/LEACHATE MANAGEMENT. OHIO EPA'S CONSTRUCTION GENERAL PERMIT ONLY ALLOWS THE DISCHARGE OF STORM WATER AND DOES NOT INCLUDE OTHER WASTE STREAMS/DISCHARGES SUCH AS VEHICLE AND/OR EQUIPMENT WASHING, ON-SITE SEPTIC LEACHATE, CONCRETE WASH-OUTS, WHICH ARE CONSIDERED PROCESS WASTEWATERS. ALL PROCESS WASTEWATERS MUST BE COLLECTED AND PROPERLY DISPOSED AT AN APPROVED DISPOSAL FACILITY. IN THE EVENT, LEACHATE OR SEPTAGE IS DISCHARGED; IT MUST BE ISOLATED FOR COLLECTION AND PROPER DISPOSAL AND CORRECTIVE ACTIONS TAKEN TO ELIMINATE THE SOURCE OF WASTE WATER.
13. A PERMIT TO INSTALL (PTI) IS REQUIRED PRIOR TO THE CONSTRUCTION OF ALL CENTRALIZED SANITARY SYSTEMS, INCLUDING SEWER EXTENSIONS, AND SEWERAGE SYSTEMS (EXCEPT THOSE SERVICE ONE, TWO AND THREE FAMILY DWELLINGS) AND POTABLE WATER LINES. PLANS MUST BE SUBMITTED AND APPROVED BY OHIO EPA. ISSUANCE OF AN OHIO EPA CONSTRUCTION GENERAL STORM WATER PERMIT DOES NOT AUTHORIZE THE INSTALLATION OF ANY SEWERAGE SYSTEM WHERE OHIO EPA HAS NOT APPROVED A PTI

CONTRACTOR / SUBCONTRACTOR CERTIFICATION

SIGNATURE	COMPANY	RESPONSIBLE FOR
NAME POSITION SIGNATURE DATE	COMPANY ADDRESS CITY, STATE, ZIP PHONE	ACTIVITY
SIGNATURE	COMPANY	RESPONSIBLE FOR
NAME POSITION SIGNATURE DATE	COMPANY ADDRESS CITY, STATE, ZIP PHONE	ACTIVITY
SIGNATURE	COMPANY	RESPONSIBLE FOR
NAME POSITION SIGNATURE DATE	COMPANY ADDRESS CITY, STATE, ZIP PHONE	ACTIVITY

COPY AS NECESSARY

DEWATERING MEASURES
DESCRIPTION:
DEWATERING MEASURES PROVIDE A STABLE AREA FOR RECEIVING AND TREATING WATER PUMPED FROM EXCAVATION OR WORK AREAS PRIOR TO BEING RELEASED OFF THE SITE. THESE PRACTICES REDUCE SEDIMENT IMPACTS TO DOWNSTREAM WATER RESOURCES
CONDITIONS WHERE PRACTICES APPLY:
DE-WATERING MEASURES ARE USED WHENEVER WATER, EITHER SURFACE OR SUBSURFACE, PREVENTS OR HINDERS CONSTRUCTION ACTIVITIES AND HAS THE POTENTIAL OF CONTRIBUTING SEDIMENT TO STREAMS. THIS PRACTICE IS APPROPRIATE FOR ANY KIND OF PUMPING USED IN CONJUNCTION WITH CONSTRUCTION ACTIVITIES.
PLANNING CONSIDERATIONS:
CONSTRUCTION ACTIVITIES OFTEN REQUIRE THAT WATER BE PUMPED FROM AN AREA TO FACILITATE WORK. THIS WATER OFTEN HAS LARGE AMOUNTS OF SUSPENDED SEDIMENTS. RATHER THAN DISCHARGE THIS WATER DIRECTLY TO A STREAM, A MEANS TO SETTLE OR REMOVE SEDIMENT MUST BE PROVIDED.
DESIGN CRITERIA:
GEOTEXTILE FILTER BAGS ARE AN INCREASINGLY COMMON WAY TO REMOVE SEDIMENT FROM DEWATERING DISCHARGE. COMMONLY, DISCHARGE IS PUMPED INTO A FILTER BAG CHOSEN FOR THE PREDOMINANT SEDIMENT SIZE. FILTER BAGS ARE TYPICALLY MANUFACTURED FROM WOVEN MONOFILAMENT POLYPROPYLENE TEXTILE OR NON-WOVEN TEXTILE. FILTER BAGS MUST BE REPLACED WHEN THEY BECOME CLOGGED OR HALF FULL OF SEDIMENT. THEY ARE SINGLE USE PRODUCTS.
FILTER BAGS ARE USEFUL HIGH FLOW PRODUCTS. THEY HAVE LIMITED ABILITY TO TREAT FINE-GRAINED SEDIMENTS. GRAVITY DRAINED BAGS SHOULD APPLY TO THE FOLLOWING:
1. THEY SHOULD BE PLACED OUTSIDE OF A VEGETATED FILTER AREA AND NOT IN CLOSE PROXIMITY TO THE STREAM OR WATER RESOURCE.
2. THEY MUST SIT ON A RELATIVELY FLAT GRADE SO THAT WATER LEAVING THE BAG DOES CAUSE ADDITIONAL EROSION. PLACING THE BAG ON A FLAT BED OF AGGREGATE WILL MAXIMIZE THE FLOW AND USEFUL SURFACE AREA OF THE BAG.
3. THEY SHOULD BE USED IN CONJUNCTION WITH A LARGE VEGETATIVE BUFFER OR A SECONDARY POND OR BARRIER

SWPPP AMENDMENT LOG

PROJECT NAME: _____ PAGE ____ OF ____
SWPPP CONTACT: _____

AMENDMENT NO.	DESCRIPTION OF AMENDMENT	DATE OF AMENDMENT	AMENDMENT PREPARED BY (NAME & TITLE)

COPY AS NECESSARY

GRADING & STABILIZATION LOG

PROJECT NAME: _____ PAGE ____ OF ____
SWPPP CONTACT: _____

DATE GRADING ACTIVITY STARTED	DESCRIPTION OF GRADING ACTIVITY	DATE GRADING ACTIVITY CEASED	DATE STABILIZATION MEASURES	DESCRIPTION OF STABILIZATION MEASURES AND LOCATION

COPY AS NECESSARY

STATE OF OHIO
DAVID A. PETRANTONE
E-61756
REGISTERED
PROFESSIONAL ENGINEER

CEDAR EXTENSION REDEVELOPMENT PHASE I

CUYAHOGA METROPOLITAN HOUSING AUTHORITY
EAST 30TH STREET
CLEVELAND, OHIO

Issue:
02.11.2015 - 90% REVIEW SET
02.24.2015 - 90% FOR PERMIT
03.24.2015 - FOR PERMIT
04.07.2015 - FOR FINAL PRICING
06.30.2015 - CITY COMMENTS
07.30.2015 - CSWCD & NEORSD
COMMENTS
09.15.2015 - ADDENDUM #1
11.09.2015 - CSWCD & NEORSD
COMMENTS

SWPPP
NOTES & DETAILS

RIVERSTONE
LAND SURVEYING · ENGINEERING · DESIGN
5819 SUPERIOR AVENUE · SUITE 116
CLEVELAND, OHIO 44103
PHONE: 216.881.8000 FAX: 216.881.8400
www.riverstonegroup.com

cityarchitecture
3636 Euclid Avenue
Suite 300 Cleveland,
Ohio 44115
phone.216.881.2444
fax.216.881.6713
www.cityarch.com

Project No.
02913
Riverstone Project: 13-286

Sheet Number:
C 7.5

Copyright © 2015

48 HOURS BEFORE YOU DIG CALL 800-362-2764 OHIO UTILITIES PROTECTION SERVICE

©2013 THE RIVERSTONE COMPANY N:\2013\DBS-13-286\DWG\13-286 T&D.DWG 11/9/2015 2:25:20 PM EST